475

APM5 series network power meter

Installation and Operation Instruction V1.5

ACREL CO.,LTD

DECLARATION

No part of this publication may be reproduced,stored in a retrieval system,or transmitted in any form by nay means,electronic,mechanical photocopying,recording,or otherwise without prior permission of Acrel. All rights reserved.

This company reserve power of revision of product specification described in this manual,without notice.Before ordering,please consult local agent for the latest specification of product.

CONTENTS

1. Overview ..... - 1 -
    1.1 Type and function ..... - 2 -
    1.2 Function selection ..... - 3 -
    1.3 Technical parameters ..... - 4 -
2. Installation and wiring instructions ..... - 6 -
    2.1 Shape and installation dimensions ..... - 6 -
    2.2 Installation method ..... - 7 -
    2.3 Engineering Construction Precautions ..... - 7 -
        2.3.1 Voltage input ..... - 7 -
        2.3.2 Current input ..... - 7 -
        2.3.3 Communication wiring ..... - 7 -
    2.4 Wiring method ..... - 8 -
        2.4.1 Wiring diagram ..... - 8 -
        2.4.2 Instrument signal terminal wiring method ..... - 12 -
3. Operating instructions ..... - 13 -
    3.1 Navigation button character number description ..... - 13 -
    3.2 Menu display overview ..... - 13 -
    3.3 Interface introduction ..... - 16 -
        3.3.1 Main interface ..... - 16 -
        3.3.2 Menu interface ..... - 16 -
        3.3.3 Vector graphic interface ..... - 16 -
4. View data information ..... - 17 -
    4.1 View event records ..... - 17 -
        4.1.1 View DIDO records ..... - 17 -
        4.1.2 View alarm messages ..... - 17 -
        4.1.3 View wave records ..... - 17 -
    4.2 View multi-rate energy ..... - 18 -
5. Parameter settings ..... - 20 -
    5.1 Parameter setting interface ..... - 20 -
    5.2 Input settings ..... - 20 -
    5.3 Communication settings ..... - 22 -
    5.4 Wireless Settings ..... - 22 -
    5.5 Alarm settings ..... - 23 -
    5.6 DO settings ..... - 26 -
    5.7 AO settings ..... - 28 -
    5.8 Multiple rate setting ..... - 29 -
        5.8.1 Time zone group selection setting ..... - 29 -
        5.8.2 Switch date settings ..... - 30 -
    5.9 Wave recording settings ..... - 31 -

5.10 Demand settings ..... - 32 -
5.11 System settings ..... - 33 -
5.12 Clear settings ..... - 34 -
5.13 version information ..... - 35 -
6. Modbus Communication instructions ..... - 36 -
6.1 Intruduction ..... - 36 -
6.2 Communication Address Table ..... - 36 -
7. Ethernet Communication Guide ..... - 77 -
7.1 Ethernet Parameter Modification ..... - 77 -
7.1.1 Modification by Button ..... - 77 -
7.2 Modbus TCP address ..... - 77 -
8. DL/T-645 Communication Guide ..... - 77 -
8.1 DL/T645-2007 Brief description of the agreement ..... - 77 -
8.2 Transmission method ..... - 77 -
8.3 Protocol ..... - 78 -
8.3.1 Data frame format ..... - 78 -
8.3.2 transmission ..... - 79 -
8.3.3 Data identification table ..... - 79 -
9. Analysis of common fault ..... - 91 -
10. Package ..... - 91 -

1. Overview

APM5 series network power meter (hereinafter referred to as the meter) is designed according to IEC international standards, with full power measurement, power statistics, power quality analysis (including harmonics, interharmonics, flicker), fault recording function (including voltage temporary rise and fall interrupt, inrush current and other records), event recording function and network communication and other functions. It is mainly used for comprehensive monitoring of power supply quality in the power grid. This series of meters is equipped with feature-rich DI/DO modules, AO modules, wireless communication modules, leakage temperature measurement modules, which can flexibly realize the full electrical circuit Power measurement and switching status monitoring.

Product model specifications and functions

product model and function

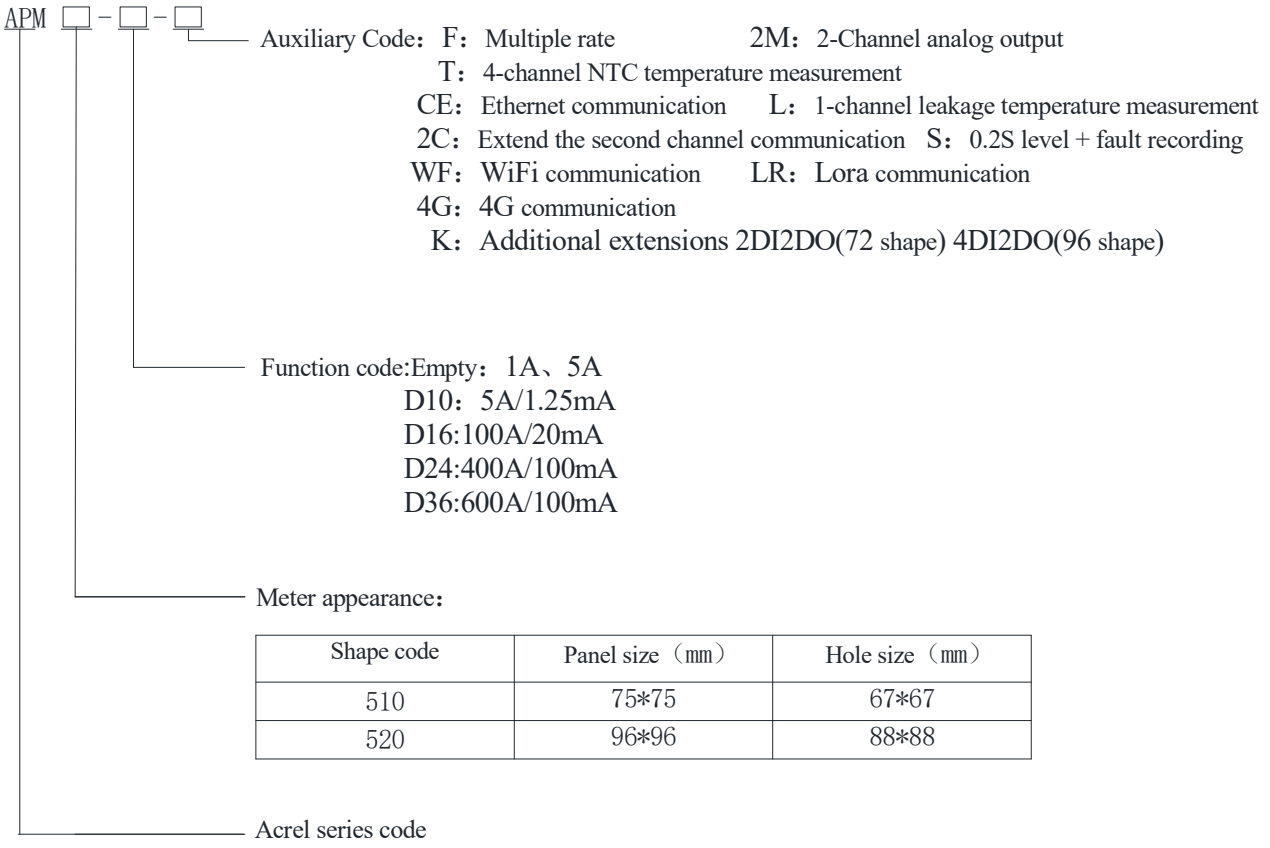

Shape code	Panel size（mm）	Hole size（mm）
510	75*75	67*67
520	96*96	88*88

Figure 1 product model and function

Note:1、When the meter is connected by 5A/1.25mA as the two-time mutual inductance method, the meter's own secondary-side transformer should be kept at a distance from the on-site primary-side transformer to avoid out-of-line interference.

1.1 Type and function

Table 1

Measured parameters	Total electrical measurement
	Four-quadrant energy、Split phase electricity、Apparent energy、Multi-rate energy
Pulse output of energy	Total active 、Total reactive energy pulse output (72 type only has active energy pulses)
Demand	Three-phase current, active power, reactive power, real-time demand of apparent power, and maximum demand (including time stamp)
Extreme value statistics	Current, line voltage, phase voltage, active power, reactive power and other electrical parameters extreme values of this month and last month (including time stamps)
Power quality	Unbalance of current, line voltage, phase voltage
	Voltage phase angle, current phase angle
	Total (odd, even) harmonic content of voltage and current
	Harmonic content of voltage and current (2-63 times)
	Interharmonic (included with option S).
	Flicker (included with S option).
	Voltage peak coefficient
	Telephone waveform factor
	Current K-factor
	Vector
	Voltage and current waveform
	Fundamental voltage and current
Fault waveform recording	Record of voltage ramp-up and drop interruptions, inrush currents, etc. (included with S option).
Event logging	DIDO records, which can record the last 128 DID records
Alarm logging	The last 128 alarm records can be recorded
Communication	Modbus - RTU protocol, DL/T 645-2007 statute
Switching value	72 Shape: 2 channels of switching input + 2 channels of switching output; 96 Shape: 4 switching inputs + 2 switching outputs

1.2 Function selection

Table 2

Base model	Basic function	Optional function	Option Group
APM510	2DI2DO1EP1C	1. CE (Ethernet Communication/MODBUS-TCP).	1+5+6+7+8 2+3+4+7+8 5+6+7+8+9 5+6+7+8+10 5+6+7+8+11
		2.2C (Extended 2nd Communication).	
		3.K (2 switch inputs + 2 switch outputs).	
		4.2M (2ch analog).	
		5.T (4-channel NTC temperature measurement).	
		6.L (1 channel leakage).	
		7.F (Compound Rate).	
		8.S (0.2S level + fault recording).	
		9.WF（WiFi Communication）	
		10.LR（Lora Communication）	
		11.4G（4G Communication）	

Table 3

Base model	Basic function	Optional function	Option Group
APM520	4DI2DO2EP1C	1. CE (Ethernet Communication/MODBUS-TCP).	1+5+6+7+8 2+3+4+7+8 1+5+6+7+8 2+3+4+7+8 5+6+7+8+9 5+6+7+8+10 5+6+7+8+11
		2.2C (Extended 2nd Communication).	
		3.K (4-way switching input + 2-way switching output).	
		4.2M (2ch analog).	
		5.T (4-channel NTC temperature measurement).	
		6.L (1 channel leakage).	
		7.F (Compound Rate).	
		8.S (0.2S level + fault recording).	
		9.WF（WiFi Communication）	
		10.LR（Lora Communication）	
		11.4G（4G Communication）	

Note:1、Optional K function, defined as extending the DID on the basis of the basic function;

1.3 Technical parameters

Table 4

Display	Display method	Dot matrix liquid crystal; Switch between Chinese and English
	Resolution	128*128；
	Backlight	White LED;
	Visible area	72 Shape: 38mm*46mm (1.78"/2.3"); 96 Shape: 56mm*60mm (2.46"/3.2");
Signal	Electrical network	Three-phase three-wire, three-phase four-wire, see the wiring diagram;
	Frequency	45～65Hz；
	Voltage	Rating: AC 3*57.7/100V, AC 3*63.5/110V, AC 3*230/400V, AC 3*400/690V (96 Shape only);
		Overload: 1.2 times the rating (continuous); 2x rating/1 second;
		Power consumption: < 0.5VA(Every way)；
	Current	Ratings: AC 3x 1 (1.2) A, AC 3x5(6)A;
		Overload: 1.2 times the rating (continuous); 10x rating/1 second;
		Power consumption: < 0.5VA(Every way)；
Measurement accuracy	Voltage, current	IEC 61557-12 0.2%
	Voltage harmonics, current harmonics	IEC 61557-12 1%
	Frequency	IEC 61557-12 ±0.02Hz
	Active power	IEC 61557-12 0.5%
	Reactive power	IEC 61557-12 1%
	Active electrical energy	0.5S class GB/T 17215.321-2008 C class GB/T 17215.321-2021 (0.2S accuracy when S is selected) 0.2S class GB/T 17215.321-2008 D class GB/T 17215.321-2021
	Reactive power	IEC 62053-24 Class 1
Power quality (only available when S is selected).	Waves recording	20 waveforms, 10 waves before and after;
	Waveform capture	128 cycle points are stored per waveform;
Switch input	Dry contact input, built-in power supply; Response time: less than 300ms	
Relay output	Contact type: normally open contact; Contact capacity: AC 250V/3A DC 30V/3A;	

Energy pulse output	Output mode: photocoupler pulse with open collector; Pulse constant: 10000imp/kWh (default);	
communication	RS485 interface/Modbus-RTU protocol and DLT645 protocol; RJ45 interface (Ethernet)/Modbus-TCP protocol; Wireless interface	
power supply	Working range: AC 85V~265V; DC100V～350V Power consumption: power consumption≤15VA;	
Safety	Power frequency withstand voltage	The power frequency withstand voltage between the housing and the auxiliary power supply, each input and output terminal group is AC 4kV/1min; The power frequency withstand voltage between the auxiliary power supply and each input terminal and each output terminal group is AC 2kV/1min; The power frequency withstand voltage between the voltage input and other input and output terminal blocks is AC 2kV/1min; The power frequency withstand voltage between the current input and other input and output terminal blocks is AC 2kV/1min; The power frequency withstand voltage between the relay output and other input and output terminal blocks is AC 2kV/1min; The power frequency withstand voltage between the terminal groups of switching input, communication, analog output and pulse output is AC 1kV/1min;
	Insulation resistance	Inputs、outputs to the shell>100MΩ；
Electromagnetic compatibility	Complies with IEC 61000 standard (Level 4);	
Environment	Operating temperature：-25℃～+70℃；Storage temperature：-40℃～+85℃； Relative humidity：≤95% without condensation；Altitude：≤2500m；	
Protection Level	Display panel IP54; (Optionally IP65).	
Standards	IEC 60068-2-1 IEC 60068-2-2 IEC 60068-2-30	Environmental Testing-Part 2-1:Tests Test A:Cold IDA Environmental Testing Part 2-2:Tests Test B:Dry heat Environmental Testing Part 2-30:Tests Test Db:Damp heat，cyclic (12+12h)
	IEC 61000-4	Electromagnetic compatibility-Testing and measurement techniques
	IEC 61557-12	Electrical safety in low voltage distribution systems up to 1 000V a.c. and 1 500V d.c –Equipment for testing， measuring or monitoring of protective measures — Part12：Performances measuring and monitoring devices(PMD)
	IEC 62053-22	Electricity metering equipment (a.c.)-Particular requirements - Part22:Static meter for active energy(class 0.2S and 0.5S)
	IEC 62053-24	Electricity metering equipment (a.c.)-Particular requirements - Part24:Static meter for reactive energy at fundamental frequency (classes 0.5S 1S and 1)

2. Installation and wiring instructions

2.1 Shape and installation dimensions

Meter and panel opening size(unit: mm(in))

Table 5

Meter shape	Panel size		Shell size			Cut-out size	
	wide	high	wide	high	deep	wide	high
72 square shape	75	75	66.5	66.5	82.8	67	67
96 square shape	96	96	86.5	86.5	77.8	88	88

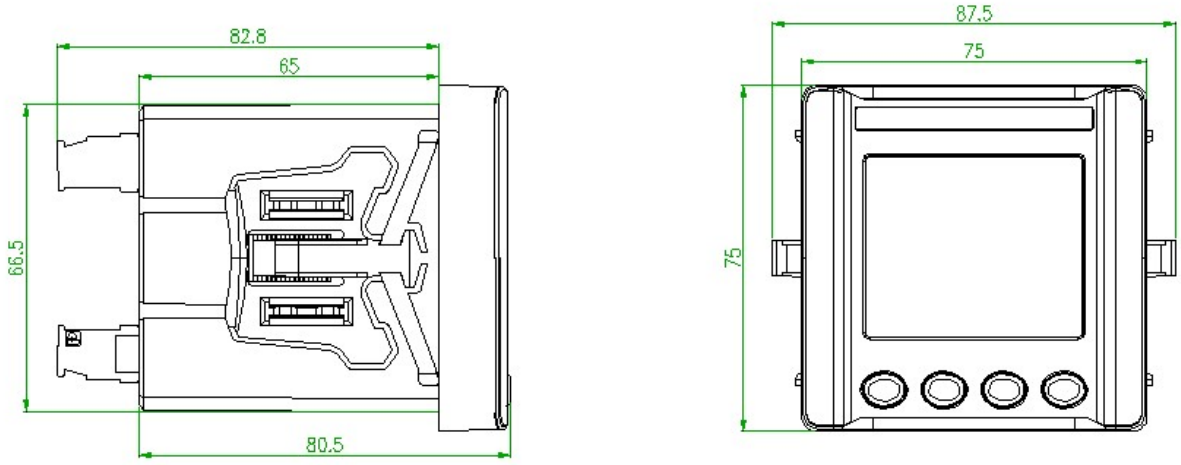

Figure 2 APM510 dimensional drawing

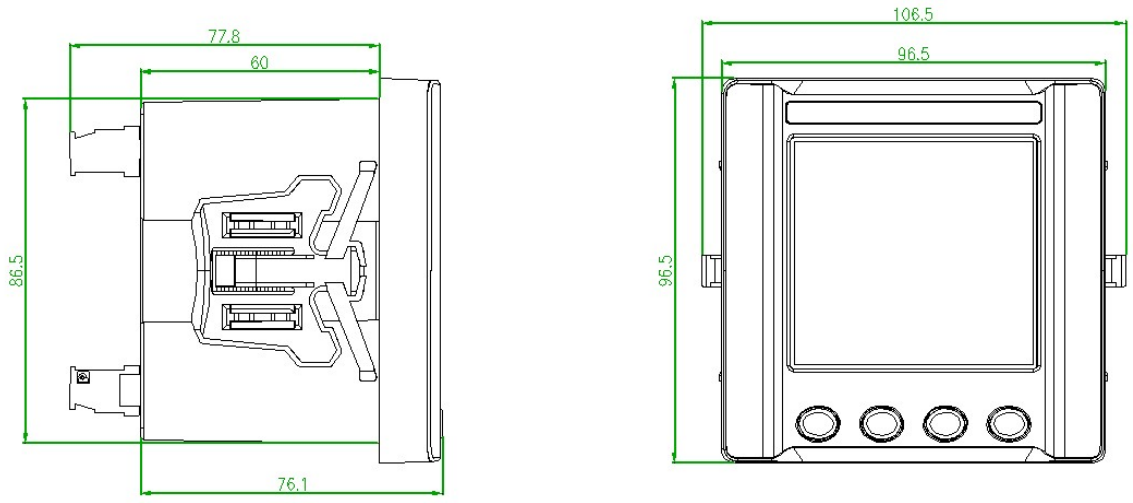

Figure 3 APM520 dimensional drawing

Note: If the instrument is installed side by side on the unified horizontal plane, it is recommended that the instrument opening spacing is 30mm.

2.2 Installation method

1) Opening holes in fixed distribution cabinets;

2) Take out the instrument and remove the snap;

3) The instrument is loaded from the front into the mounting hole, as shown in Figure 4;

4) Insert the instrument tab and secure the instrument as shown in Figure 5.

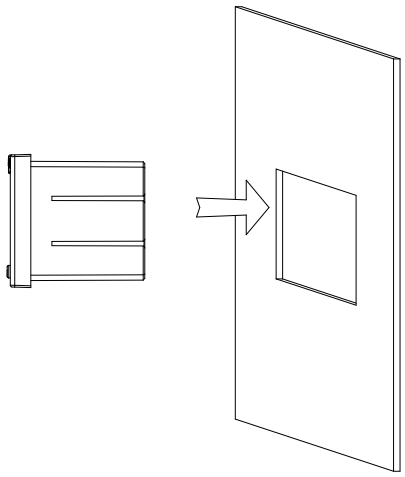

Figure 4

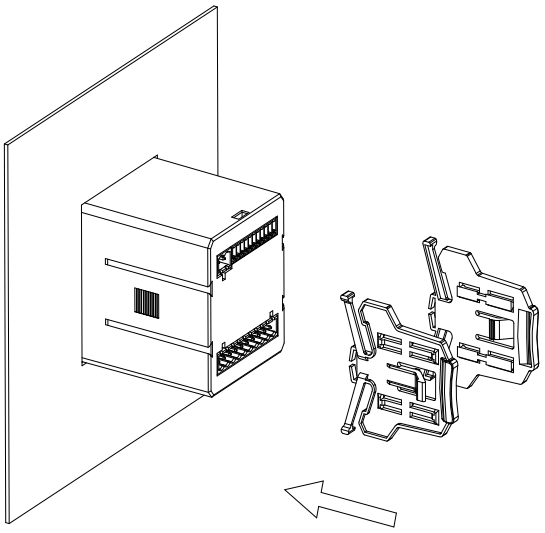

Figure 5

2.3 Engineering Construction Precautions

2.3.1 Voltage input

The input voltage should not be higher than 120% of the rated input voltage of the product (100V or 1 1 0V or 400V or 690V), otherwise PT should be used; A 1 A fuse must be installed at the voltage input; It is necessary to set the wiring mode of the product according to the PT wiring method of the product, and the method is as follows:

Table 6

Wiring method	Selection
2 elements	3P3W
3 elements	3P4W

2.3.2 Current input

Rated input current of 1A or 5A, requires the use of external CT (it is recommended to use the wiring block, do not directly connect the CT, for ease of disassembly); Ensure that the input current corresponds to the voltage, the phase sequence is consistent, and the direction is consistent; If there are other instruments connected to the CT circuit used, the wiring should be connected in series; Before removing the current input connection of the product, be sure to disconnect the CT primary circuit or short the secondary circuit first!

2.3.3 Communication wiring

The instrument provides asynchronous half-duplex RS485 communication interface, using MODBUS-RTU protocol, all kinds of data information can be transmitted on the communication line. It is recommended to use a shielded twisted pair for communication connections, and the cross-section of each core is not less than 0.5mm^2. When wiring, the communication line should be kept away from strong electric cables or other strong electric field

environments.

An example of wiring for the communication part is shown in the following figure:

Correct wiring method: communication cable shield is connected to the ground.

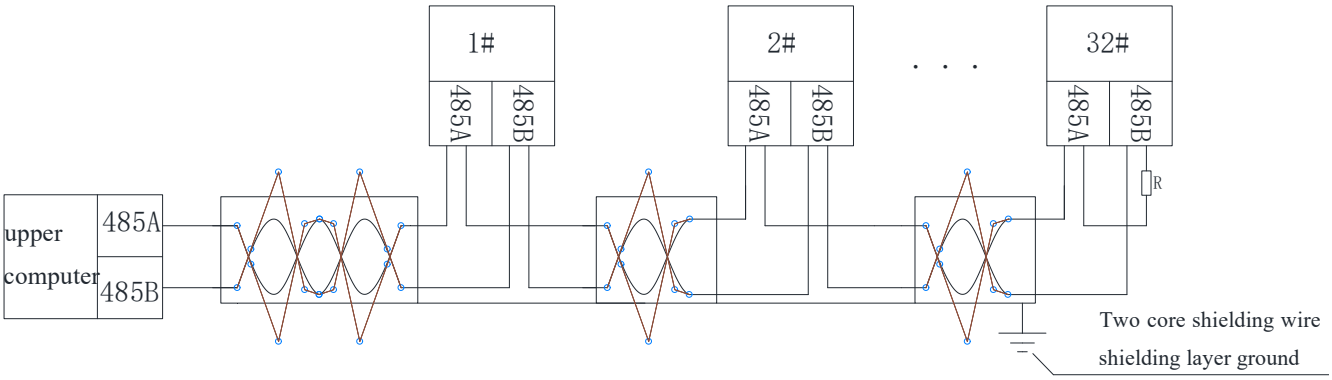

Figure 6

It is recommended to add a matching resistor between A and B of the end meter, and the resistance range is 120Ω to 10 kΩ.

2.4 Wiring method

Depending on the design requirements, it is recommended to add fuses (BS88 1A gG) to the power supply and voltage input terminals to meet the safety requirements of the relevant electrical specifications.

When the instrument is connected by the two-time mutual inductance method, the instrument's own two-time side transformer should be kept at a distance from the field primary-side transformer to avoid outgoing interference.

2.4.1 Wiring diagram

Schematic diagram of the APM510 terminal block: where "4, 5, 6, 7, 8, 9" are currents Signal input terminal number; "11, 12, 13, 14" voltage signal input terminal number; "1, 2" is the auxiliary power supply terminal number of the instrument;" 21, 22, 24, 25" are communication terminal numbers;" 17, 18" is the energy pulse output terminal number;" 30、31、39”，“32、33、38 "Enter the terminal number for the switch;" 40、42、49”，“44、46、48” is the relay output terminal number, "81, 82, 83, 84, 89, 90" is the temperature measurement terminal number, "80, 88" is the leakage terminal number. (The specific wiring is mainly physical).)

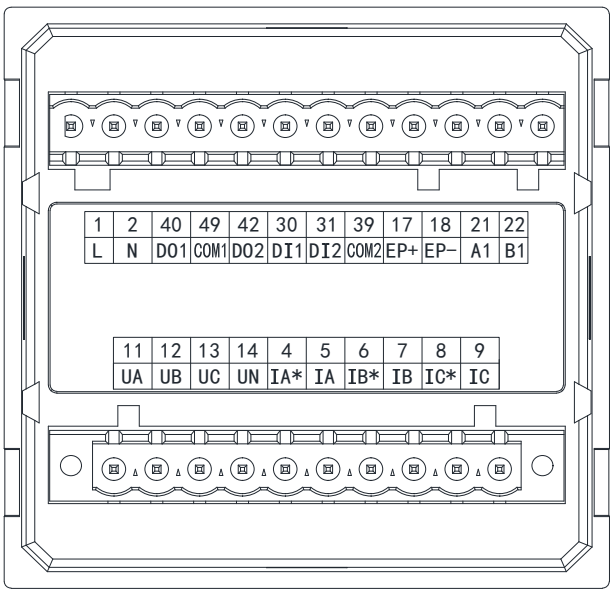

Figure 7 APM510 basic wiring diagram

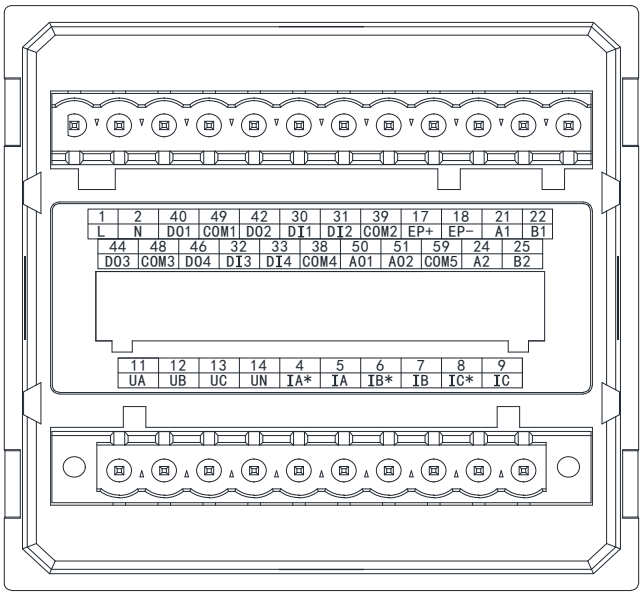

Figure 8 APM510 extended K/2M/2C wiring diagram

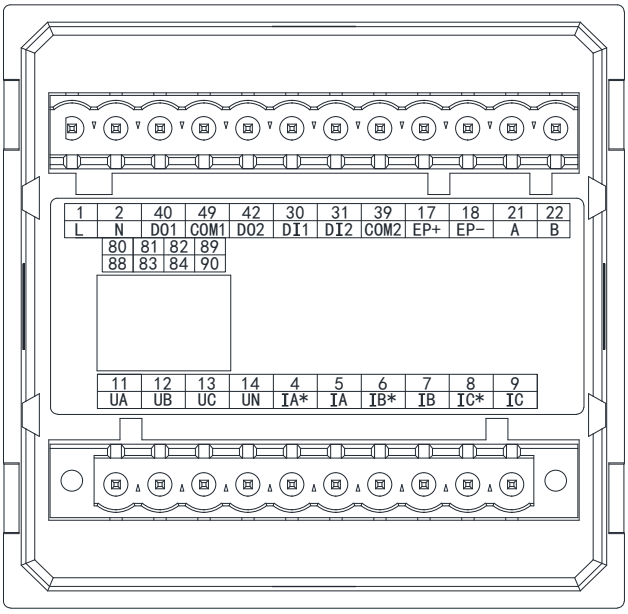

Figure 9 APM510 extended Ethernet/temperature measurement/leakage wiring diagram

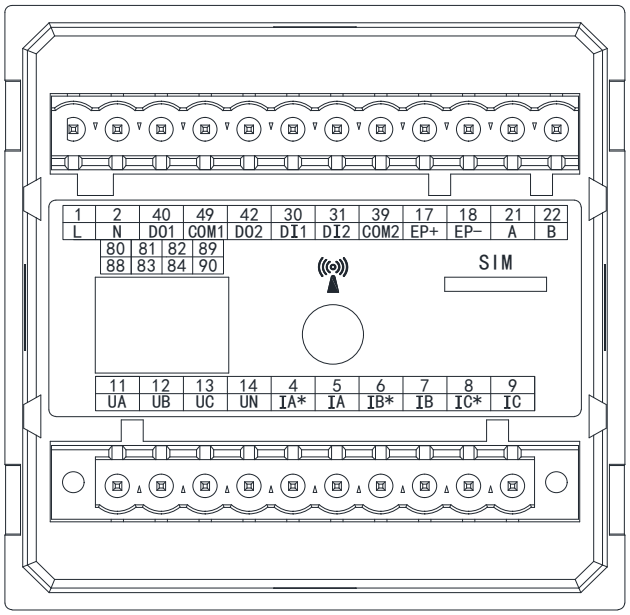

Figure 10 APM510extended 4G wiring diagram

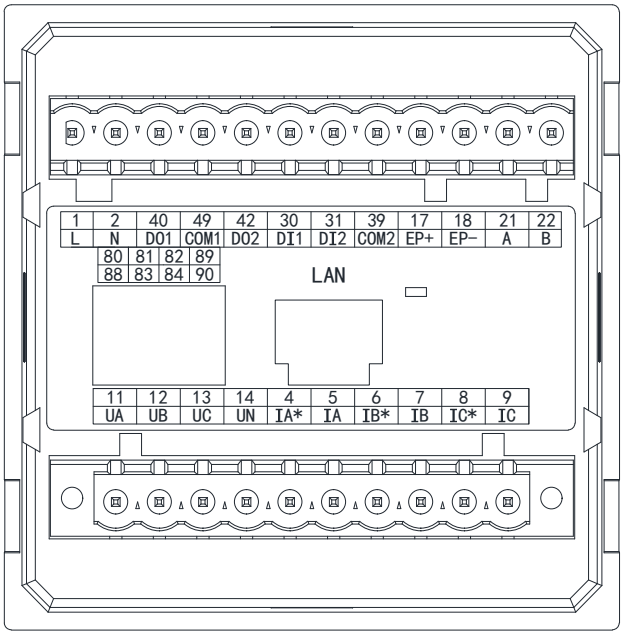

Figure 11 APM510 extended CE wiring diagram

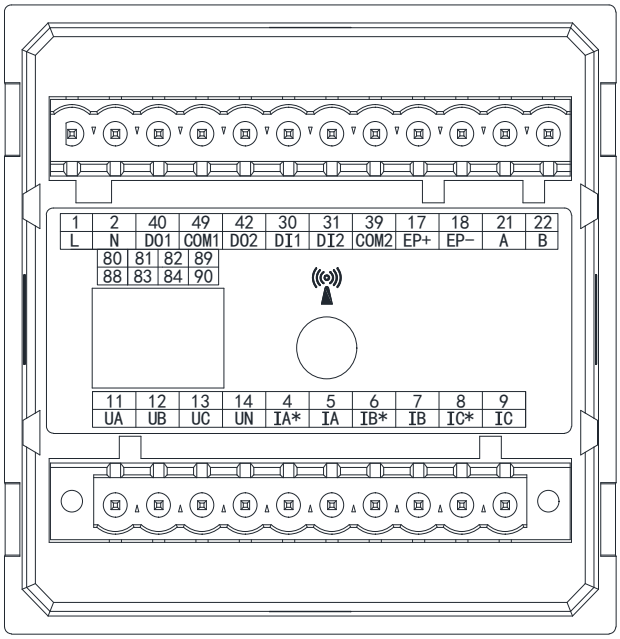

Figure 12 APM510 extended WF/LoRa wiring diagram

Schematic diagram of APM520 terminal blocks: where "4, 5, 6, 7, 8, 9" are the current signal input terminals No. "11, 12, 13, 14" voltage signal input terminal number; "1, 2" is the auxiliary power supply terminal number of the instrument;" 21, 22, 24, 25" are communication terminal numbers;" 17, 18, 19" is the energy pulse output terminal number;" 30、31、39”，“34、35、 36, 37, 38" are the switch input terminal numbers;" 40、42、49”，“44，45，46，47 "is the relay output terminal number," 81, 82, 83, 84, 89 , 90" is the temperature measurement terminal number, "80, 88" is the leakage terminal number. (Specific wiring is mainly physical)

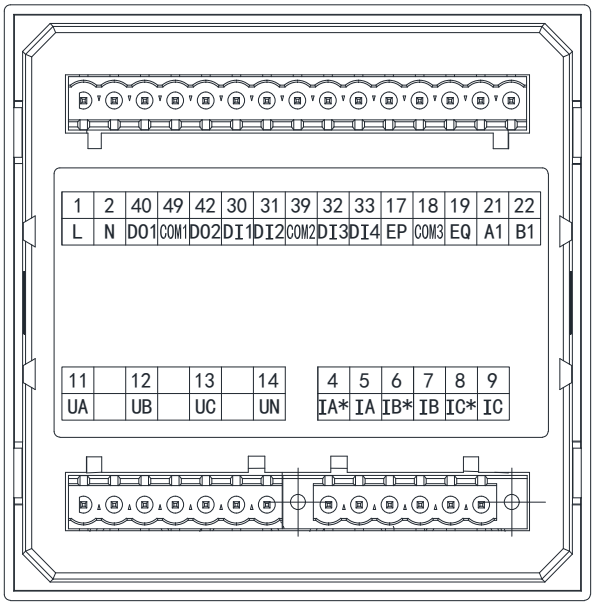

Figure 13 APM520 basic wiring diagram

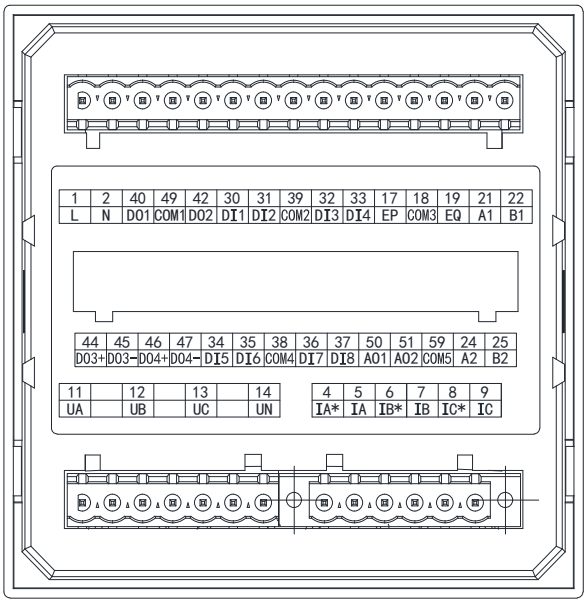

Figure 14 APM520 extended K/2M/2C wiring diagram

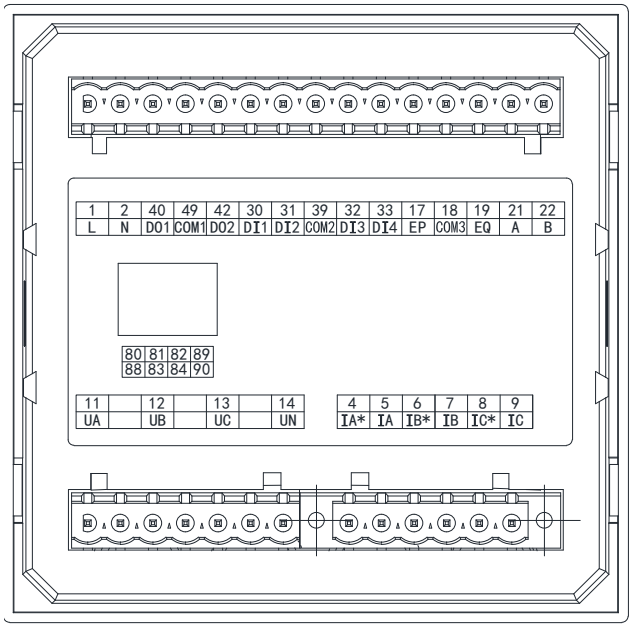

Figure 15 APM520 Extended Ethernet/Temperature Measurement/Leakage Wiring Diagram

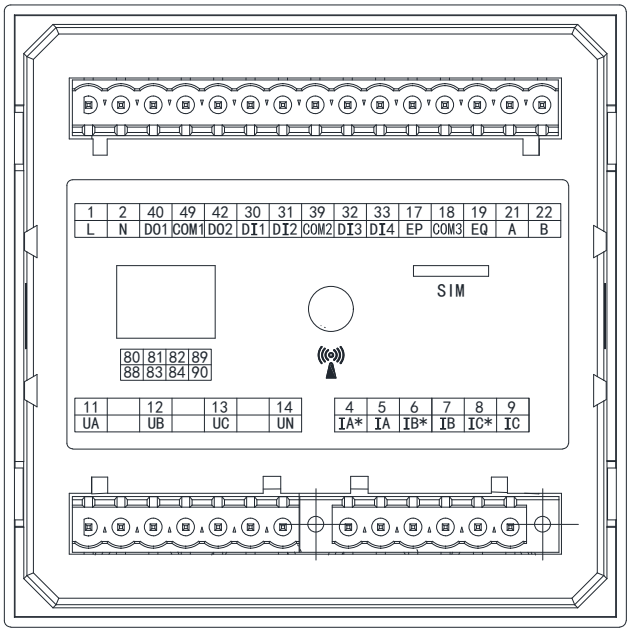

Figure 16 APM520 Extended 4G Wiring Diagram

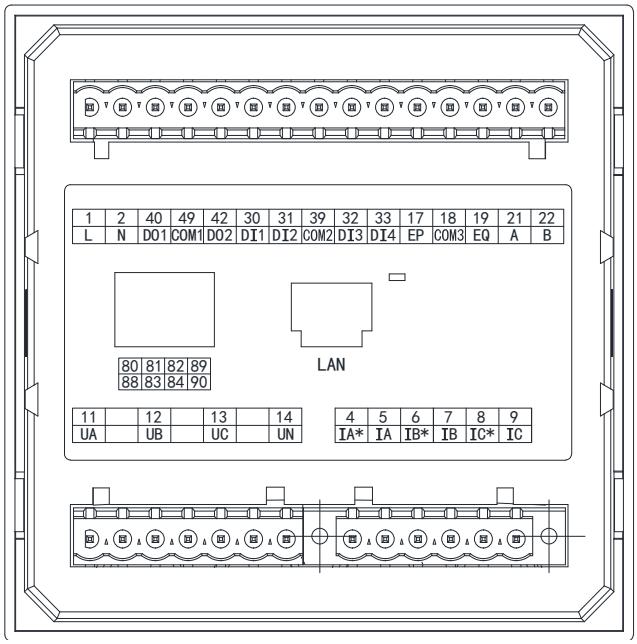

Figure 17 APM520 Extended CE Wiring Diagram

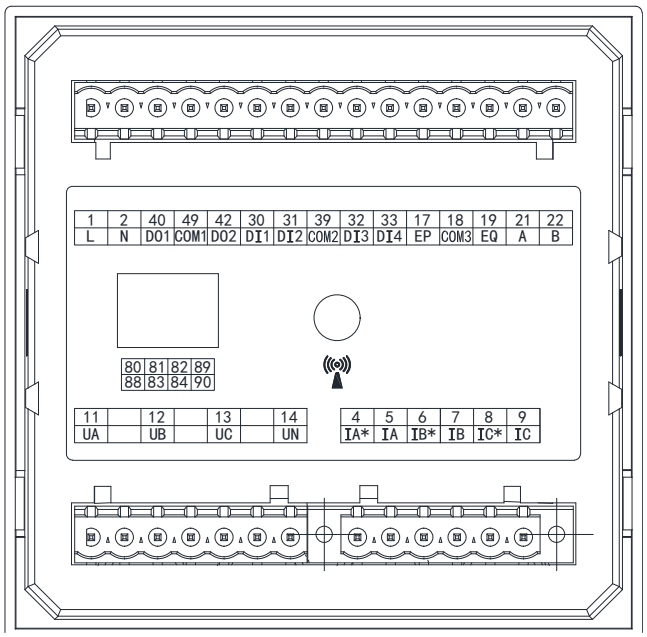

Figure 18 APM520 Extended WF/LoRa Wiring Diagram

Note: 1 Temperature terminals 81, 82, 83, 84 are T1, T2, T3,T4,89,90 are public;

2. Leakage terminals, 80 is positive, 88 is negative.

2.4.2 Instrument signal terminal wiring method

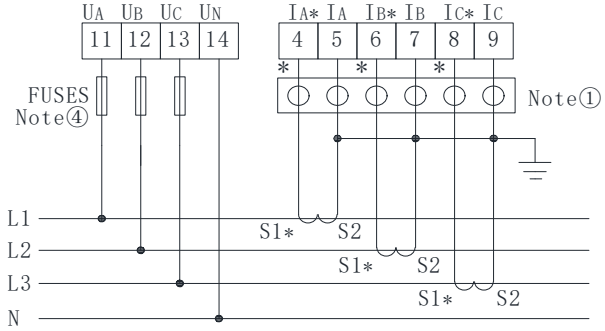

3P4L/3CT(The meter is set to 3P4L)

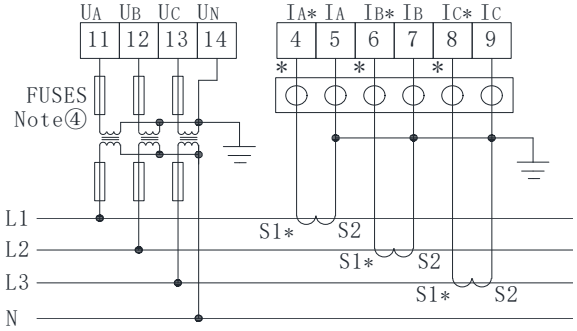

3P4L/3PT+3CT(The meter is set to 3P4L)

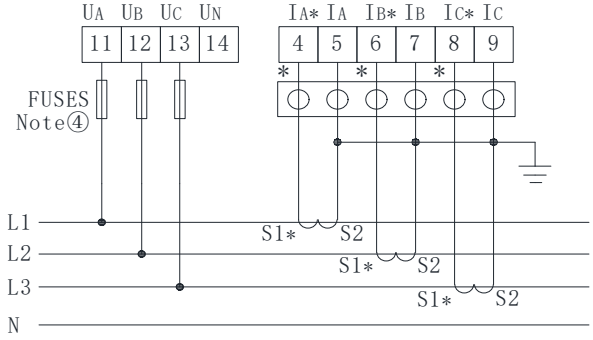

3P3L/3CT(The meter is set to 3P3L-3CT) Note②

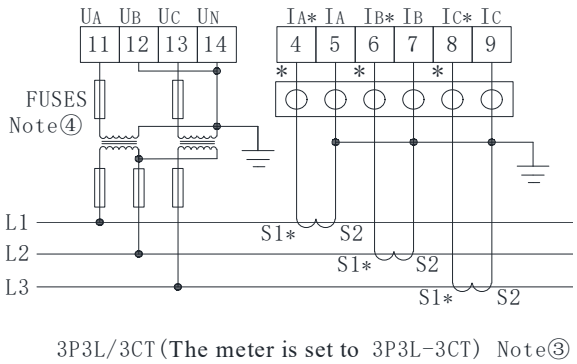

3P3L/3CT(The meter is set to 3P3L-3CT) Note③

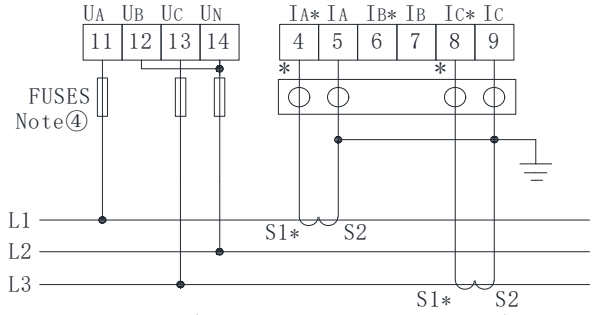

3P3L/2CT(The meter is set to 3P3L-2CT)

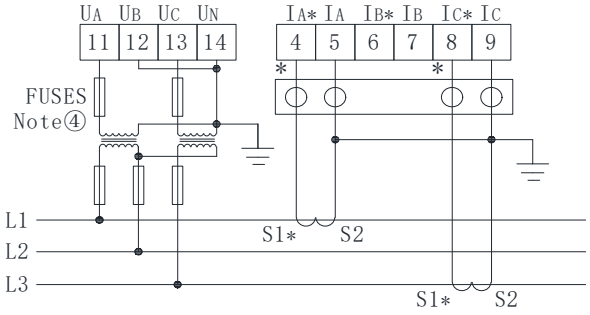

3P3L/2CT(The meter is set to 3P3L-2CT)

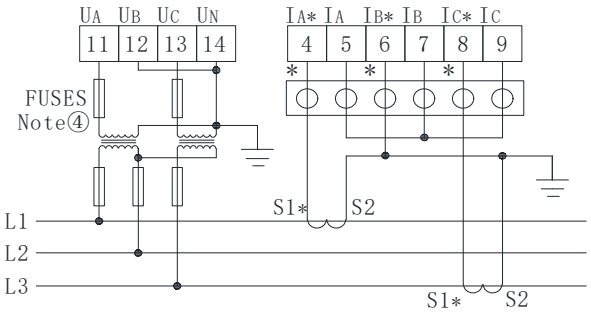

3P3L/2CT(The meter is set to 3P3L-2CT) Note③

Note①: ○○○○○○ is the test terminal for CT secondary side short circuit

Note②:only applicable to three-phase balanced load

Note③:B phase current is only displayed and not involved in other power calculation

Note④:FUSES must be installed with a fuse，rated current of 1A

Figure 19 Signal wiring diagram

3. Operating instructions

3.1 Navigation button character number description

Table 7

symbol	description
Menu	Press this button to enter the menu interface
Esc	Press this button to return to the first level menu
＞	To the right, press the button to display the cursor to move to the right one position or jump to the right one screen
＜	To the left, press the button to display the cursor to move one position to the left or to the left screen
∧	Up, press this button to jump to the previous screen or the current menu interface to page up
∨	Down, press this button to jump to the next screen or the current menu interface to page down
※	Press this button to enter the third level menu
√	Confirm or enter the interface
◇	Press this button to collapse the secondary menu
Exit	Set the interface to exit, press 2 times or more to exit without saving settings.
Save	Exit after saving settings
Enter	Confirm access to settings
+	Data increment
-	Declining data

3.2 Menu display overview

Table 8

First level menu	Second level menu	Third level menu	Note
Overview			Line voltage average, current average, total P, forward active energy EPI
Basic electrical parameter	voltage	Maximum, minimum	Line voltage, phase voltage, deviation, angle, and average, maximum, minimum.
	current	Maximum, minimum	Three-phase current value, neutral current, deviation, angle, voltage and current angle, and average, maximum, minimum.
	frequency	Maximum, minimum	Frequency values as well as maximum and minimum values.
	power	Maximum, minimum	Phase separation P, Q, S, PF and total P, Q, S, PF and maximum and minimum values.
	temperature		
Demand	Power demand		Current total P, Q, S demand and forward P, Q, S maximum and reverse P, Q, S, including time stamp.
	Current demand		Current current per phase and maximum value, including timestamp.

Electric energy	Four quadrant power		Positive active energy EPI, reactive energy EQL, apparent energy ESI reverse active energy EPE, reactive energy EQC, apparent energy ESE, net active energy EPI-EPE, net reactive energy EQL-EQC, net apparent power ESI-ESE (The meter defaults to the power state, then the above formula is established; if the meter is in the power generation state, the net active energy EPE-EPI, reactive energy EQC-EQL)
	Multi-rate electric energy		Total forward multi-rate electricity (total, sharp, peak, flat, valley，deep valley), total reverse multi-rate electricity (total, sharp, peak, flat, valley， deep valley), total positive multi-rate electricity this month (total, Sharp, peak, flat, valley，deep valley), total reverse multi-rate electric energy (total, sharp, peak, flat, valley，deep valley) and historical 12 month reverse and reverse multi-rate electric energy (total, sharp, peak, flat, Valley，deep valley)
	Frozen electric energy		Electric energy，demand and current of the last 12 freezing cycles
Power quality	harmonic	Maximum, minimum,total parity	Current total harmonic, current total harmonic content, voltage total harmonic, voltage total harmonic content, voltage and current fractional harmonic content, current total odd harmonic content, current total even harmonic content, voltage total odd Subharmonic content, total harmonic even harmonic content, maximum and minimum current harmonic content, and maximum and minimum voltage harmonic content
	factor		Telephone waveform factor, voltage peak coefficient, current K coefficient
	Unbalance		Voltage/current imbalance
	Vector		Vector, voltage sequence component (positive sequence, negative sequence, zero sequence), current sequence component (positive sequence, negative sequence, zero sequence)
	Waveform		Current voltage waveform, current current waveform, in-phase voltage and current waveform.
	Fundamental wave		Fundamental voltage and current
	Interharmonics		Total Interharmonics of voltage and voltage
	Flicker		Long flicker and short flicker of voltage

Input output	Switch input		The status of the current switch input
	Switch output		The status of the current switch output
	Analog input		Current analog input value (reserved)
	Analog output		The current analog output value
Record	DIDO record		DIDO closed disconnect records, the meter stores up to 128 DID event records
	Alarm logging		Aarm 1 and 2 status, the instrument stores up to 128 recent alarm records
	Record waves		Waveform and measured value of voltage interruption, voltage surreption, voltage sag, inrush current
Parameter settings	Input settings		Phase line, primary side voltage, secondary side, primary side current, secondary side current, nominal voltage, current, pulse constant, pulse output, voltage, current shielding setting
	Communication settings		nstrument 485 address, baud rate, check digit, instrument Profibus address, 645 address, TCP port, IP address, subnet mask, default gateway settings
	Wireless settings		LORA settings
	Alarm settings		Alarm type, alarm action value, etc.
	DO settings		DO channel, output selection and delay setting
	AI settings		(Reserved)
	AO settings		AO channel, type, decimal point, and numeric settings
	Multi-rate setting		Time zone group selection setting, time period peak flat valley setting, switching date setting
	Wave recording setting		Trigger recording settings: impulse current, voltage swell, voltage sag, voltage interruption threshold setting, voltage harmonics, DI trigger
	Demand setting		Demand sliding window, cycle setting
	System settings		Language, password, backlight, contrast, extreme self-clearing time, imbalance algorithm, time setting
	Clear settings		Clear power, clear demand, clear extremes, clear alarm and switch records, clear transient waveform recording language, password, backlight, contrast, extreme self-clearing time, unbalance algorithm, time setting,restore factory,reset
	Version Information		Meter software version information, instrument internal temperature, alarm special symbol description

3.3 Interface introduction

3.3.1 Main interface

The instrument is displayed as the instrument model and version information, and then the overview interface is displayed. The default main interface of the instrument is the overview interface. The main interface can be set. For details, refer to the default interface settings of 6.11 system settings.

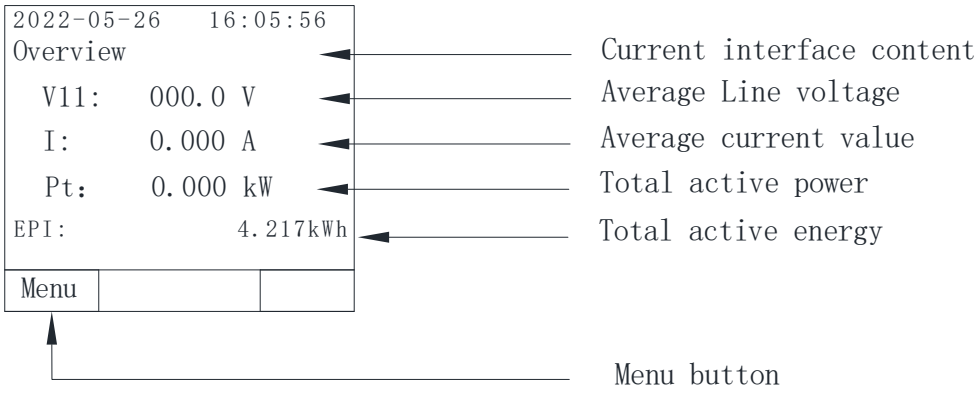

Figure 20

3.3.2 Menu interface

Press Menu on the main interface to enter the menu interface.

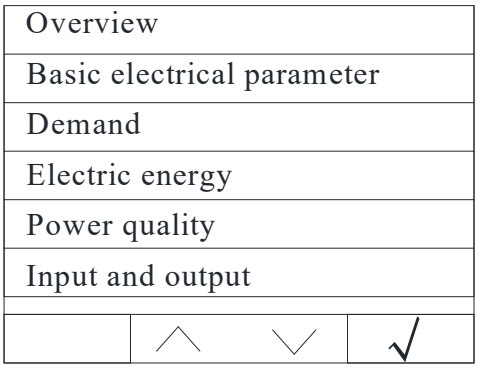

Figure 21

3.3.3 Vector graphic interface

Press on the main interface “Menu” go to the menu interface. Press ∨ Until "Power Quality" is highlighted, press √ displays power quality. Press ∨ until "Vector" is highlighted, press √ Displays vector graphics. Press ＜or ＞ switch the voltage sequence component, currentOrdinal components. Press “Menu” go back to the menu interface.

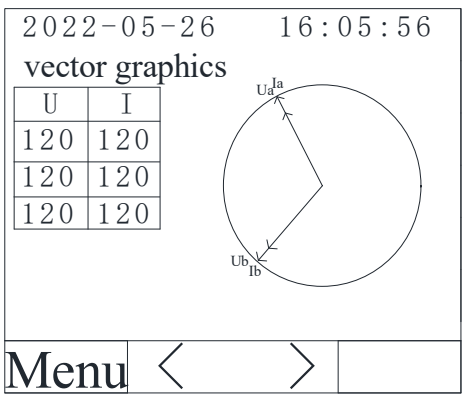

Figure 22

4. View data information

4.1 View event records

4.1.1 View DIDO records

On the main interface, press Menu to enter the menu interface, press ∨ until Event Records is highlighted, press √ to display event records. Press ∨ until "DIDO Record" is highlighted and press √ to display dido records. When the DI/DO state changes, event records can be generated, and up to 128 event records can be stored in the meter body.

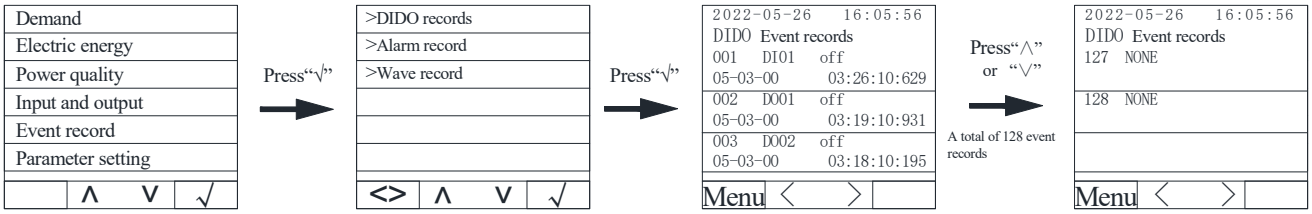

Figure 23

Note: Stored records are on a first-in, first-out basis, and if 128 records are full, new records overwrite old records.

4.1.2 View alarm messages

On the main interface, press Menu to enter the Menu interface, press ∨ until "Event record" is highlighted, press √ to display event record. Press ∨ until "alarm record" is highlighted, and press √ to view the current alarm state; The alarm event record can be viewed by ∨, and the last 128 alarm records can be viewed chronologically by < or >. When the number of alarm records reaches 128, the first in, first out principle is implemented, and the new alarm will automatically overwrite the earliest record. Each alarm record contains the alarm value, alarm group, alarm action (action or recovery), and alarm time.

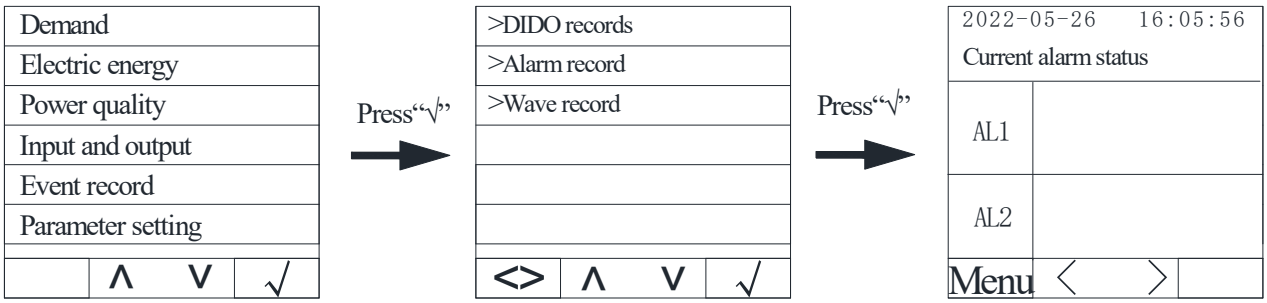

Figure 24

4.1.3 View wave records

On the main interface, press Menu to enter the Menu interface, press ∨ until "Event record" highlight, press √ show Event record, press ∨ until "recording record" highlight, press √ show recording record, press > can view recording record in chronological order. On the waveform interface, press < or > to view the waveforms left or right, and press ∧ or ∨ to switch to view the waveforms Ua, Ub, Uc, Ia, Ib, and Ic. Press Exit to Exit

.

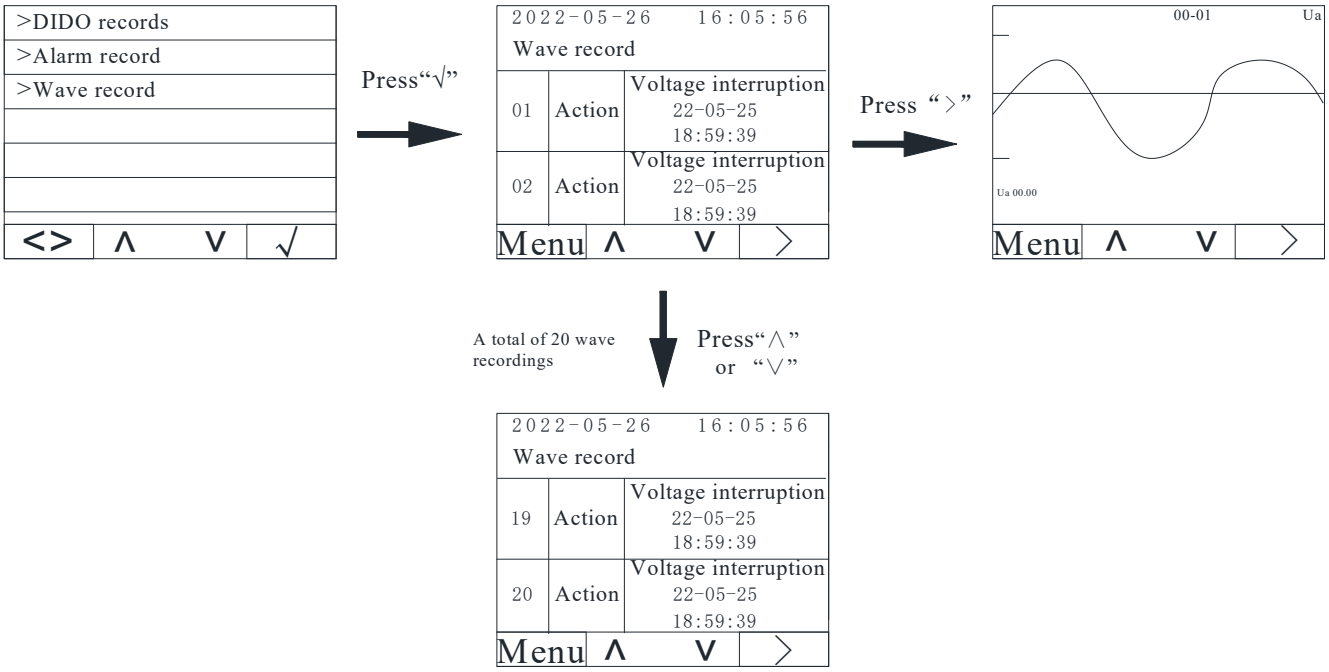

Figure 25

Note:1. The recorded wave only saves 20 waveforms before and after the event, and each waveform has 128 points.

4.2 View multi-rate energy

On the main interface, press Menu to enter the menu interface, press ∨ until "Electric Energy" is highlighted, and press √ to display the multi-rate energy interface. Press √ until the "multi-rate energy" is highlighted, and press √ to display multi-rate energy. Currently, there are four-rate version (T-total energy, T1- tip energy, T2-peak energy, T3 - level energy, T4 - valley energy) and eight-rate version (T-total energy, T1- tip energy, T2 - peak energy, T3 - level energy, T4 - valley energy, T5- deep valley energy, T6 reserved, T7 reserved, T8 reserved). The box selection content in the following figure is the eight-rate version interface.

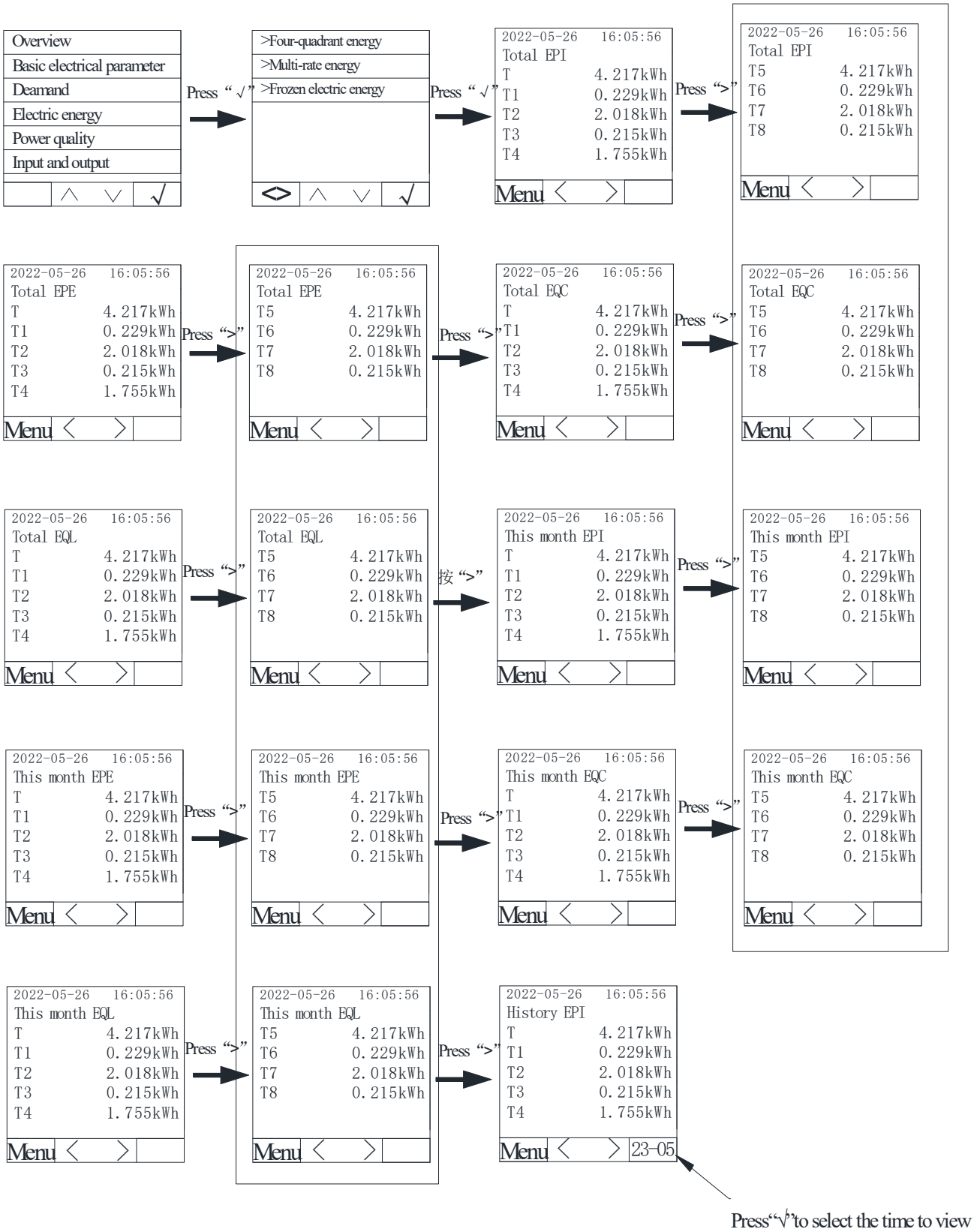
Overview
Basic electrical parameter
Deamand
Electric energy
Power quality
Input and output
Press “√”
>Four-quadrant energy
>Multi-rate energy
>Frozen electric energy
Press “√”
2022-05-26 16:05:56
Total EPI
T 4.217kWh
T1 0.229kWh
T2 2.018kWh
T3 0.215kWh
T4 1.755kWh
Press “>”
T5 4.217kWh
T6 0.229kWh
T7 2.018kWh
T8 0.215kWh
Total EPE
Total EQC
Total EQL
This month EPI
This month EPE
This month EQC
This month EQL
History EPI
Menu
按“>”
23-05
Press“√”to select the time to view

Figure 26

5. Parameter settings

5.1 Parameter setting interface

The parameter setting interface is divided into the following parts: input settings, communication settings, alarm settings, DO settings, AI settings, AO settings, compound rate settings, recording settings, demand settings, system settings, clearing, version information.

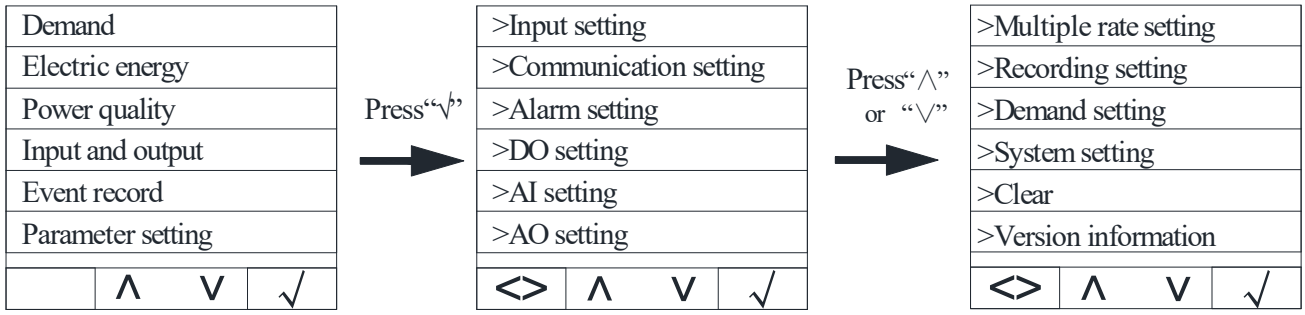

Figure 27

5.2 Input settings

On the main interface, press Menu to enter the Menu interface, press ∨ until "Parameter setting" is highlighted, press √ to enter the parameter setting interface. Press ∨ until "Input Settings" is highlighted, and press √ to enter the input Settings interface. Press ∧ or ∨ to switch the input set item, and press > Enter the project Settings, press + or - to change, press > to shift, press Exit to Exit the project Settings after the current item Settings have been changed. Repeat the preceding steps to modify the Settings. After the change is complete, press the Exit window to enter the password. The default password is 0001 (customers can change the password according to the password set in 6.11. If you forget the password, you need to contact our company). Press Save to Save the configuration and exit; press Esc to exit without saving the configuration.

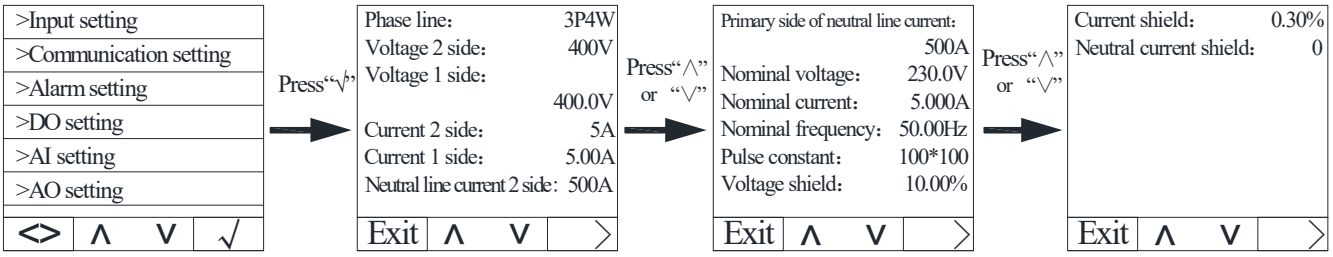

Figure 28

Table 9

Setting item	Range	Description	Setting Basis
Phase line	3P4W 3P3W-3CT 3P3W-2CT	Current instrument wiring mode	The setting must be correct to reflect the actual connection method of the detection point. The wrong wiring mode setting will cause the data measured by the device to be completely wrong.
Secondary side of	100V、110V、400V、690V	A/B/C or AB/BC/CA three-phase secondary side voltage rating, this	Input and set according to the needs of the field test，and the instrument

voltage		parameter affects the measurement results of the device.	displays the measurement results as a measured value
Voltage primary side	50~1999999V	A/B/C or AB/BC/CA three-phase primary side voltage rating, this parameter affects the measurement results of the device.	
Secondary side of current	1A、5A	A/B/C three-phase secondary side current rating, this parameter affects the measurement results of the device.	
Current side	1~59999A	A/B/C three-phase secondary side current rating, this parameter affects the measurement results of the device.	
Neutral current secondary side	1A、5A	N-phase secondary side current rating, this parameter affects the measurement results of the device.	
Neutral current first side	1~59999A	N-phase primary side current rating, this parameter affects the measurement results of the device.	
nominal voltage	10~999.9V	The theoretical voltage value affects the judgment of the voltage above and below the limit in the transient event judgment (the nominal voltage is the line voltage at 3P3W)	Set to the secondary side phase voltage value according to the actual situation on site, the mains supply is usually set to 230V.
Nominal current	0.1~9.999A	Theoretically, the current value in most cases affects the transient current impulse current judgment.	Set to the secondary side phase current value according to the actual situation on site.
Nominal frequency	45.00-65.00Hz	Used to calculate frequency deviation	It is set according to the actual situation on site
Pulse constant	100~99900	Number of pulses per kWh (kvar, kVA)	According to user requirements, the default value is 10000.
Voltage shielding	0~9.99%	Voltage measurement mask value	According to user requirements, the default value is 0.20%.
Current shielding	0~9.99%	Current measurement mask value	According to user requirements, the default value is 0.20%.
Center line current shield	0~9.99%	Centerline current measurement mask value	According to user requirements, the default value is 0.20%.

5.3 Communication settings

On the main interface, press Menu to enter the Menu interface, press ∨ until "Parameter setting" is highlighted, press √ to enter the parameter setting interface. Press ∨ until Communication Settings is highlighted, and press √ to enter the communication Settings screen. Press ∧ or ∨ to switch the item for communication setting, press Enter to Enter the item setting, press + or - to change, press > to shift, press Exit to Exit the item setting when the current item setting has been changed. Repeat the preceding steps to modify the Settings. After the change is complete, press the Exit window to enter the password. The default password is 0001(customers can change the password according to the password set in 6.11. If you forget the password, you need to contact our company). Press Save to Save the configuration and exit; press Esc to exit without saving the configuration.

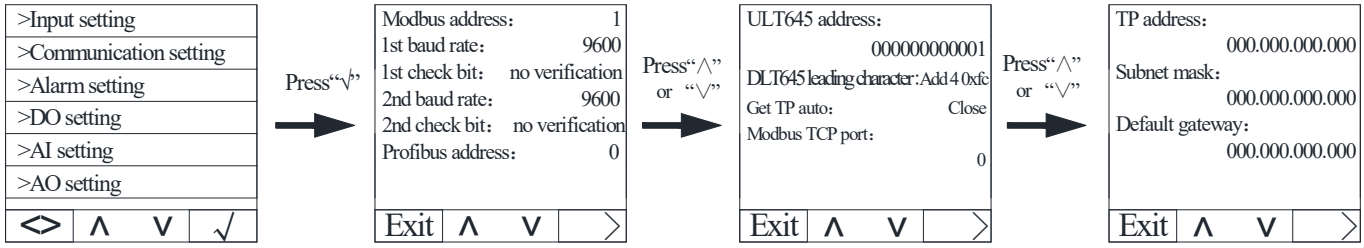

Figure 29

Table 10

Setting item	range
Modbus address	1~247
1st baud rate	1200，2400，4800，9600，19200，38400
1st check digit	No parity, 2 stop bits, odd parity, even parity
2nd baud rate	1200，2400，4800，9600，19200，38400
2nd check digit	No parity, 2 stop bits, odd parity, even parity
Profibus address	1~126
DLT645 address	0~999999999999
DLT645 Leader	Add None(No preamble)、Add 4 0xfc(Add 4 0xFC)
Modbus TCP port	1~59999
IP address	000.000.000.000（If the expansion module MCE is not configured, the default is 0. If the force expansion module MCE is configured, it is 192.168.8.150.）
Subnet mask	000.000.000.000（If the expansion module MCE is not configured, the default is 0. If the force expansion module MCE is configured, it is 255.255.255.0.）
Default gateway	000.000.000.000（If the expansion module MCE is not configured, the default is 0. If the force expansion module MCE is configured, it is 192.168.8.1.）

5.4 Wireless Settings

On the main interface, press Menu to enter the Menu interface, press ∨ until "Parameter setting" is highlighted, press √ to enter the parameter setting interface. Press ∨ until wireless Settings is highlighted, and press √ to enter the wireless Settings screen. Press ∧ or ∨ to switch the item for wireless setting, press > to Enter the item setting, press + or - to change, press > to shift, press Exit to Exit the item setting when the current item setting has been changed. Repeat the preceding steps to modify the Settings. After the change is complete, press the Exit window to enter the password.

The default password is 0001(customers can change the password according to the password set in 6.11. If you forget the password, you need to contact our company). Press Save to Save the configuration and exit; press Esc to exit without saving the configuration.

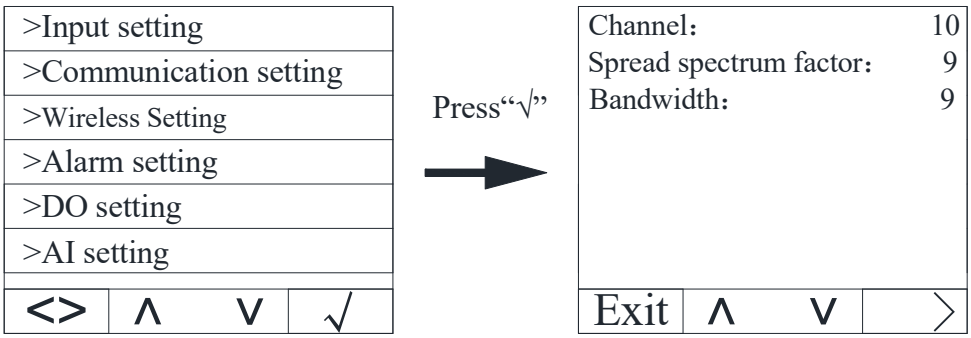

Figure 30

Table 11

Channel	Frequency band	Frequency	Channel	Frequency band	Frequency
0	460	863.6404	**23**	483	886.6404
1	461	864.6404	**24**	484	887.6404
2	462	865.6404	**25**	485	888.6404
3	463	866.6404	**26**	486	889.6404
4	464	867.6404	**27**	487	890.6404
5	465	868.6404	**28**	488	891.6404
6	466	869.6404	**29**	489	892.6404
7	467	870.6404	**30**	490	893.6404
8	468	871.6404	**31**	491	894.6404
9	469	872.6404	**32**	492	895.6404
10	470	873.6404	**33**	493	896.6404
11	471	874.6404	**34**	494	897.6404
12	472	875.6404	**35**	495	898.6404
13	473	876.6404	**36**	496	899.6404
14	474	877.6404	**37**	497	900.6404
15	475	878.6404	**38**	498	901.6404
16	476	879.6404	**39**	499	902.6404
17	477	880.6404	**40**	500	903.6404
18	478	881.6404	**41**	501	904.6404
19	479	882.6404	**42**	502	905.6404
20	480	883.6404	**43**	503	906.6404
21	481	884.6404	**44**	504	907.6404
22	482	885.6404	**45**	505	908.6404

5.5 Alarm settings

On the main interface, press Menu to enter the Menu interface, press ∨ until "Parameter setting" is highlighted, press √ to enter the parameter setting interface. Press ∨ until "Alarm setting" is highlighted, press √ to enter the alarm setting interface. Press ∧ or ∨ to switch the alarm set item, press > to enter the set of the item, press + or - to change, press > to shift, press Exit to Exit the set of the item after the current item set is changed. Repeat the preceding steps to modify the Settings. After the change is complete, press the Exit window to enter the password. The default password is

0001(customers can change the password according to the password set in 6.11. If you forget the password, you need to contact our company). Press Save to Save the configuration and exit; press Esc to exit without saving the configuration.

For alarm types, refer to 5.1.2 for alarm table 1: Alarm classification instructions

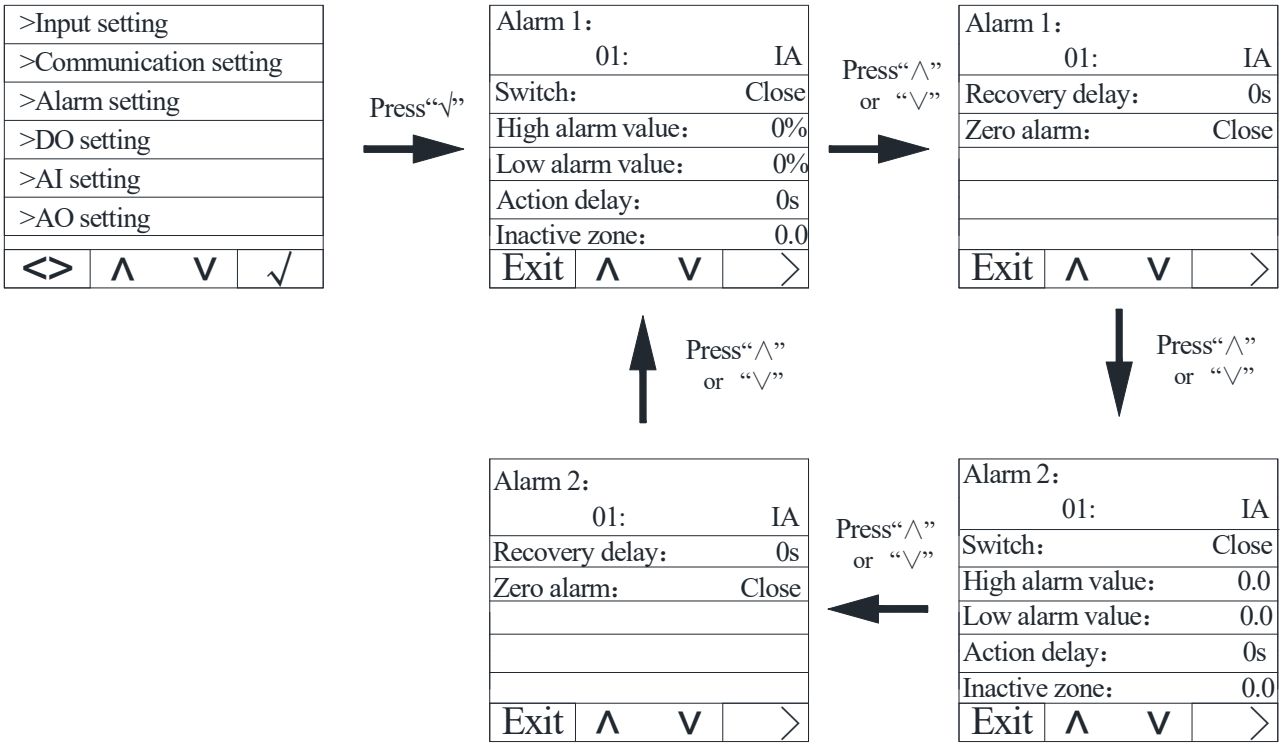

Figure 31

Table 12

Setting item	Range	Description
Alarm 1 types	Refer to 5.1.2 View Alarm Table 1: Alarm Classification Description	
Alarm switch	On, off	Turn alarms on or off
Action threshold	0~999.9%	Alarm action value, unit and decimal point position are consistent with the meter display value
Action delay	0~9999	Alarm delay value, in seconds
Reset threshold	-9999~9999	Alarm recovery value, unit and decimal point position are consistent with the meter display value
Reset delay	0~9999	Alarm recovery delay value, accurate to the second
Zero alarm switch	On, off	Zero alarm enable, valid when low alarm

Alarm Instructions:

The instrument has two sets of alarms, each set of alarms can detect a variety of alarm conditions, including electrical parameter switching input changes, phase loss, reverse phase sequence, imbalance, harmonics, etc. Among them, the switching input change and inverse phase sequence only need to set the enable bit, and the rest of the alarm needs to be set alarm conditions.

Introduction to Alarm Types:

1. Electrical parameter alarm

Overcurrent: Zero value alarm setting is not suitable for overcurrent alarm, when the single-phase current is higher than or equal to the operating value and meets the set operation delay time, the single-phase overcurrent alarm is started; When the single-phase current falls below the set recovery value and the delay time is met, the single-phase overcurrent alarm is dismissed.

Undercurrent: When the single-phase current is lower than or equal to the operating value and the set operation delay time is met, the single-phase overcurrent alarm is activated; When the single-phase current is higher than the set recovery value and the delay time is met, the single-phase overcurrent alarm is dismissed.

Note: When the undercurrent is enabled and the zero value alarm is enabled, the alarm is valid when the single-phase current is equal to 0; When the undercurrent is enabled and the zero value alarm is disabled, the alarm is invalid when the single-phase current is equal to 0.

2. Phase loss current alarm

When any current (not all currents) is equal to or lower than the operating value and the delay time is met, a phase loss current alarm is generated; And when any of the following conditions occur, the alarm is lifted:

All three-phase currents are higher than the recovery value and meet the delay time

All three phases of the current are lower than the phase loss operating values

3. Reverse phase sequence alarm: The action and recovery values and delay values are not suitable for inverted phase sequence alarms, when the phase sequence is not ABC normal phase sequence, an inverse phase sequence alarm is generated.

4. DI alarm: When the DI state changes from the initial state, an alarm is generated.

The following is a schematic diagram of how the instrument handles alarm parameters.

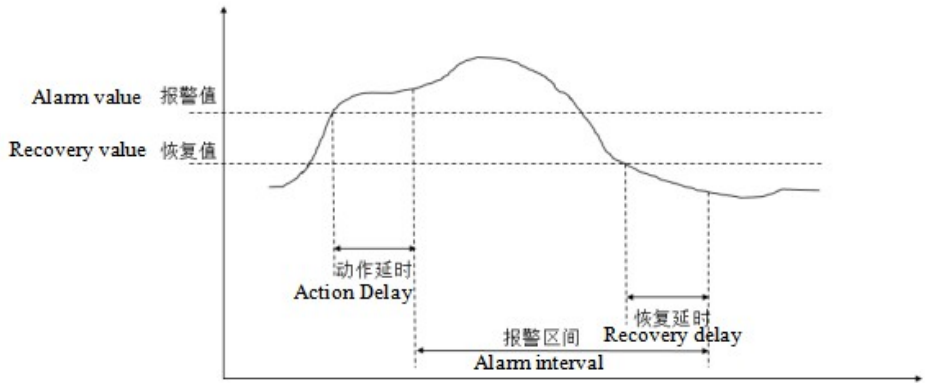

Figure 32

Here are some examples:

The first set of alarm A phase current overcurrent alarm enables is set.

Action value: The action value is a primary side value, such as: set the alarm value to 5.500A, when the A phase current value exceeds At 5.500A, the alarm condition is triggered and the timing starts.

Action delay: When the alarm condition is triggered, if the A phase current value has been exceeding 5.500A, the delay value is set (accurate to the second). After the alarm record is generated, the alarm group (Alarm1), the alarm type (A phase overcurrent), and the alarm time are recorded (e.g. 2019-2-12 14:15:20), if the DO associates the

alarm, the DO action (See DO Settings for details).

Recovery value: The recovery value is a primary side value, such as: set the recovery value to 5.400A, after the A phase overcurrent alarm has occurred, when When the A-phase current value is lower than 5.400A, the alarm condition is lifted and the timing begins.

Recovery delay: When the alarm condition is triggered, if the A-phase current value is consistently below 5.400A, the delay value is set (accurate to the second). After the release alarm record is generated, the alarm group (Alarm1), the alarm type (A phase overcurrent) are recorded, and the alarm time is lifted (e.g. 2019-2-12 14:17:20) If the DO associates the alarm, then DO reverts to its original state. From this, the alarm time can be calculated as 2 minutes.

Note: The alarm is invalid when the action value and recovery value are both zero.

Note: For high alarm types, the recovery value needs to be less than the alarm value, and for the low alarm type, the recovery value needs to be greater than the alarm value.

5.6 DO settings

On the main interface, press Menu to enter the Menu interface, press ∨ until "Parameter setting" is highlighted, press √ to enter the parameter setting interface. Press ∨ until "DO Settings" is highlighted, and press √ to enter the DO Settings interface. Press ∧ or ∨ to switch the item set for DO, press Enter to Enter the setting for the item, press + or - to change, press > to shift, press Exit to Exit the item setting when the current item setting is changed. Repeat the preceding steps to modify the Settings. After the change is complete, press the Exit window to enter the password. The default password is 0001(customers can change the password according to the password set in 6.11. If you forget the password, you need to contact our company). Press Save to Save the configuration and exit; press Esc to exit without saving the configuration.

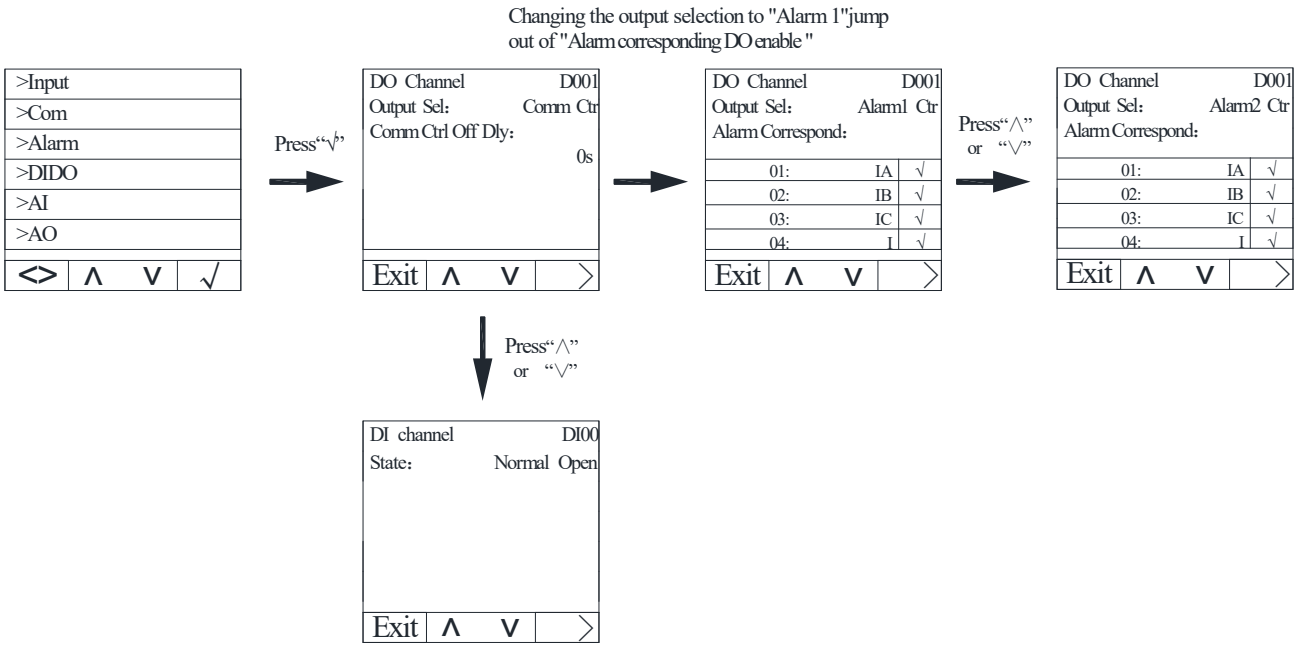

Figure 33

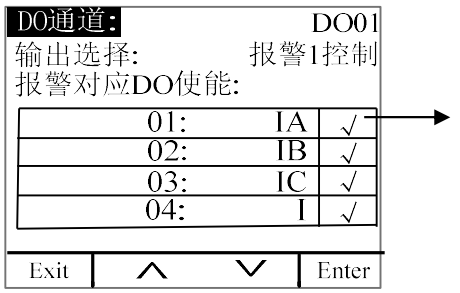

Here you need to check the DO associated alarm type, the specific alarm type, please refer to Table 1 of 5.1.2, that is, the DO action when the alarm is generated; If it is not checked, it is not associated, that is, the DO does not move when the alarm is generated.

Figure 34

Table 13

Setting item	range	Description
DO channel	DO01~DO04	DO channel selection
Output selection	Alarm 1 control, alarm 2 control, communication control	DO Control method selection
Communication control self-breaking delay	0~9999s	It is valid when communication control. When set to 0, it is the level control mode. When it is not 0, it is the pulse control mode. After the delay setting time is disconnected, the unit is s.
Alarm corresponding to DO enable	See alarm type description	
DI1	Normally open, normally closed	DI initialization state, when the DI state is changed by the initial state, and the DO is associated with the alarm, the DO action
DI2	Normally open, normally closed	
DI3	Normally open, normally closed	
DI4	Normally open, normally closed	
DI channel	DI00、DI01、DI02、DI03	
Default state		

Note：

1. Example: When DO1 selects the output control mode as alarm 1 control or alarm 2 control, and associates A phase over current alarm and A phase over power alarm, the rest are not associated. When the alarm is generated when the A phase overcurrent or the A phase over power occurs, the DO1 action occurs.

2. Before selecting the alarm type associated with DO, you need to confirm that the alarm type is checked in the alarm setting. If it is not checked, DO will not be able to operate when the alarm condition is generated.

5.7 AO settings

On the main interface, press Menu to enter the Menu interface, press ∨ until "Parameter setting" is highlighted, press √ to enter the parameter setting interface. Press ∨ until "AO setting" lights up, and press √ to enter the AO setting interface. Press ∧ or ∨ to switch the AO set item, press Enter to Enter the set of the item, press + or - to change, press > to shift, press Exit to Exit the set of the item after the current item set is changed. Repeat the preceding steps to modify the Settings. After the change is complete, press the Exit window to enter the password. The default password is 0001(customers can change the password according to the password set in 6.11. If you forget the password, you need to contact our company). Press Save to Save the configuration and exit; press Esc to exit without saving the configuration.

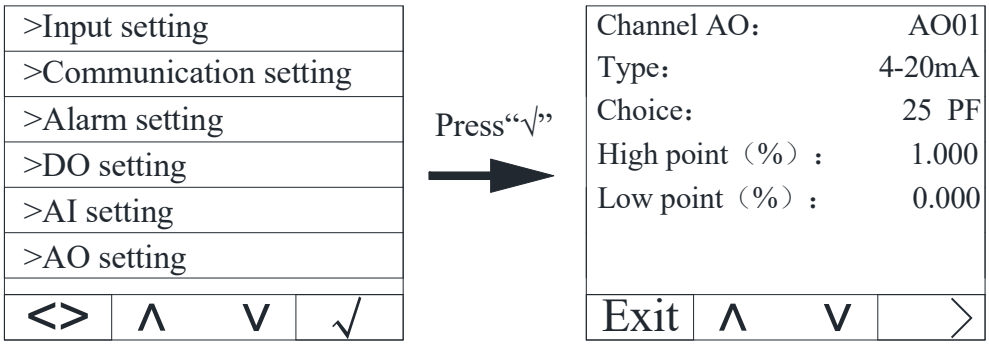

Figure 35

Table 13

Setting item	range	Description
AO channel	AO01~AO02	Analog output channel selection
type	4-20mA、0-20mA	Analog output type
selection	See Output corresponding parameters, see Note [1]	Multiple parameters can be associated, see Table 14. The output value of the AO varies with the value of the associated parameter. If the frequency is associated, then when the frequency changes, the output value of the AO also changes.
High point(%).	Determined based on the associated signal	AO outputs the parameter values corresponding to the high points
Low point(%).	Determined based on the associated signal	AO outputs the parameter values corresponding to the lows

able 14 Analog output selection of corresponding parameters

NO.	Parameter	NO.	Parameter	NO.	Parameter
01	UA (A phase voltage).	10	PA (A phase active power).	19	SB (B contrast in power).
02	UB (B phase voltage).	11	PB (B phase active power).	20	SC (C contrast in power).
03	UC (C phase voltage).	12	PC (C phase active power).	21	St (total apparent power).
04	UAB (AB line voltage).	13	Pt (total active power).	22	PFA (Phase A Power Factor).
05	UBC (BC line voltage).	14	QA (A phase reactive power).	23	PFB (B-phase power factor).
06	UCA (CA line voltage).	15	QB (B phase reactive power).	24	PFC (C phase power factor).
07	IA (Phase A current).	16	QC (C phase reactive power).	25	PF (Power Factor).

08	IB (B phase current).	17	Qt (total reactive power).	26	F (frequency).
09	IC (C phase current).	18	SA (A phase in power).		

For example, when AO1 is set to a 4-20mA output, the signal selection is 00 IA (A phase current) and the output high corresponds to a signal of 5.000 A, the output low corresponding signal is 0.000A. When the A phase current value is 5A, the AO1 output is 20mA; When the A phase current value is 0A, the AO1 output is 4mA; When the A phase current value is 2.5A, the AO1 output is 12mA.

5.8 Multiple rate setting

On the main interface, press Menu to enter the Menu interface, press ∨ until "Parameter setting" is highlighted, press √ to enter the parameter setting interface. Press ∨ until "complex rate Setting" is lit, press √ to enter the complex rate setting interface. Switch the item for the complex rate setting by ∧ or ∨, press Enter to Enter the setting for the item, press + or - to change, press > to shift, press Exit to Exit the item setting after the current item setting change is complete. Repeat the preceding steps to modify the Settings. After the change is complete, press the Exit window to enter the password. The default password is 0001(customers can change the password according to the password set in 6.11. If you forget the password, you need to contact our company). Press Save to Save the configuration and exit; press Esc to exit without saving the configuration.

5.8.1 Time zone group selection setting

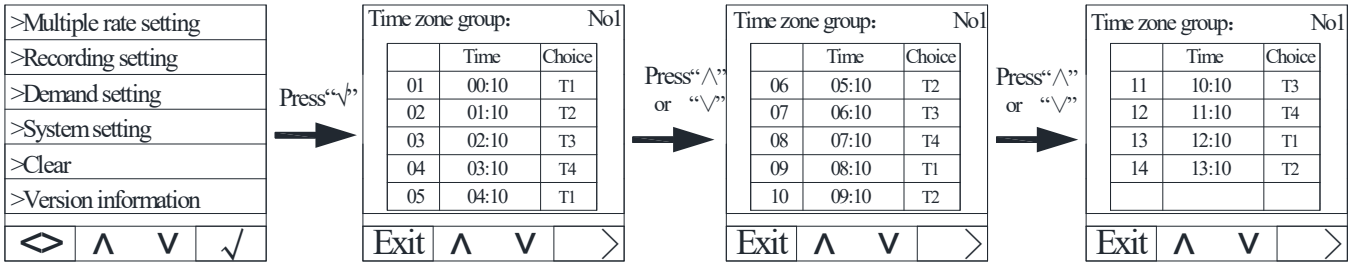

Figure 36 Diagram of time zone group selection

NOTE：T1-T5: Peak, Shoulder, Off-Peak, Valley, Super Off-Peak，T6-T8: Reserved

Each time period is divided into 14 intervals, which are described in detail in the following table

Table 16 Time period setting Example

Number	Time	Selection	Notes
01	00:00	T3	The rate during 00:00 to 01:00 is categorized as **Off-Peak**
02	01:00	T3	The rate during 01:00 to 03:00 is categorized as **Off-Peak**
03	03:00	T3	The rate during 03:00 to 05:00 is categorized as **Off-Peak**
04	05:00	T3	The rate during 05:00 to 07:00 is categorized as **Off-Peak**
05	07:00	T2	The rate during 07:00 to 09:00 is categorized as **Shoulder**
06	09:00	T2	The rate during 09:00 to 10:00 is categorized as **Shoulder**
07	10:00	T1	The rate during 10:00 to 12:00 is categorized as **Peak**
08	12:00	T1	The rate during 12:00 to 13:00 is categorized as **Peak**
09	13:00	T1	The rate during 13:00 to 15:00 is categorized as **Peak**
10	15:00	T2	The rate during 15:00 to 17:00 is categorized as **Shoulder**

11	17:00	T2	The rate during 17:00 to 19:00 is categorized as **Shoulder**
12	19:00	T2	The rate during 19:00 to 21:00 is categorized as **Shoulder**
13	21:00	T4	The rate during 21:00 to 23:00 is categorized as **Valley**
14	23:00	T4	The rate during 23:00 to 00:00 is categorized as **Valley**

Note: When manually setting or writing the rate period through communication, it is necessary to ensure that the time set for the next period is greater than the time set for the previous period.

5.8.2 Switch date settings

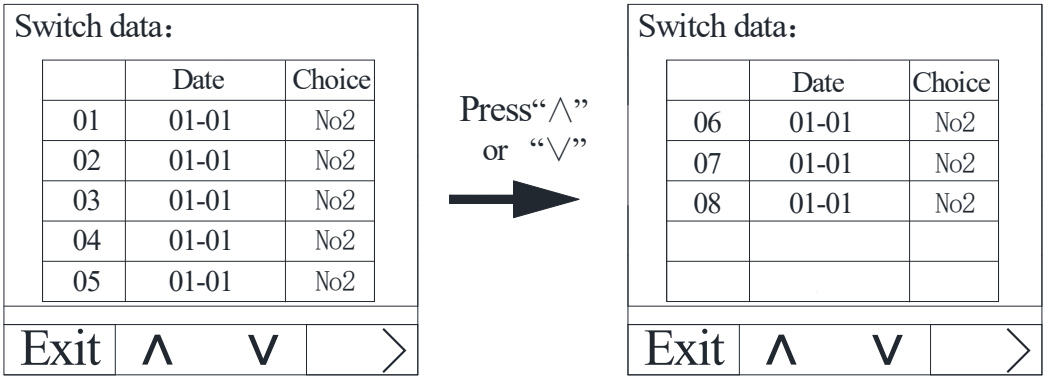

Figure 37

To switch the date settings, you can set up to 8 date periods, for example, see the following table.

Table 16

Serial number	date	selection	description
01	01-01	No1	Indicates that the multi-rate energy is calculated using time period 1 from January 1 to March 1.
02	03-01	No2	Indicates that the multi-rate electric energy is calculated using time period 2 from March 1 to May 1.
03	05-01	No2	Indicates that the multi-rate energy is calculated using time period 2 from May 1 to July 1.
04	07-01	No3	Indicates that the multi-rate electric energy is calculated using time period 3 from July 1 to September 1.
05	09-01	No3	Indicates that the multi-rate electric energy is calculated using time period 3 from September 1 to November 1.
06	11-01	No4	Indicates that the multi-rate electricity is calculated using time period 4 from November 1 to January 1.
07			
08			

5.9 Wave recording settings

On the main interface, press Menu to enter the Menu interface, press ∨ until "Parameter setting" is highlighted, press √ to enter the parameter setting interface. Press ∨ until "Transient Setting" lights up, and press √ to enter the transient setting interface. Press ∧ or ∨ to switch the item for the transient setting, press Enter to Enter the setting for the item, press + or - to make the change. After the change is complete, press Exit and enter the password. Press Save to Save the change and Exit. Press Esc to Exit without saving the change.

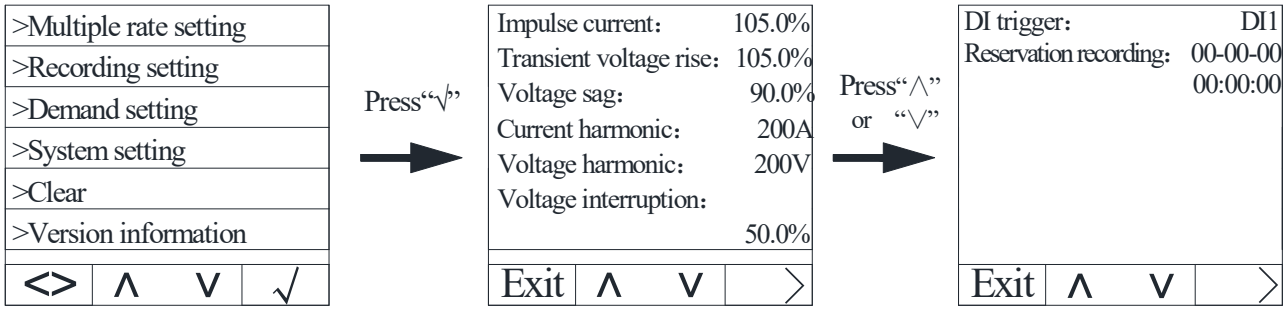

Figure 38

Table 17

Setting item	Range	Description
electric shock	105.0~200.0 %	The current threshold (the nominal current multiplied by this parameter) affecting the inrush current event affects the judgment result of the inrush current event, and the stricter the power quality requirement is, the smaller the value is.
Voltage rise	105.0~200.0 %	When the sag event is judged, the real-time voltage RMS value is required to be higher than the threshold value (nominal voltage multiplied by this parameter), which affects the judgment result of the swell event, and the stricter the power quality requirement, the smaller the value.
Voltage dip	10.0~95.0%	When the sag event is judged, the real-time voltage RMS value is required to be lower than the threshold value (nominal voltage multiplied by this parameter), which affects the judgment result of the sag event. The stricter the power quality requirement is, the larger the value is.
Current harmonics		
Voltage harmonics		
Voltage interruption	0~50.0%	When the interrupt event is judged, the real-time voltage RMS value is required to be lower than the threshold value (nominal voltage multiplied by this parameter), which affects the judgment result of the interrupt event. The stricter the power quality requirement is, the larger the value is.
DI trigger	DI1、DI2	It only supports the recording function when the 2-channel DI triggering on the main body of the instrument is supported.
Reservation wave recording	00-00-00 00：00：00	The format corresponds to year-month-day hour: minute: second. After modifying the date time, save the change settings. When the system time reaches the set reservation recording time, record the waveform.

5.10 Demand settings

On the main interface, press Menu to enter the Menu interface, press ∨ until "Parameter setting" is highlighted, press √ to enter the parameter setting interface. Press ∨ until "Demand setting" is highlighted, and press √ to enter the demand setting interface. Press ∧ or ∨ to switch the item for the quantity setting, press Enter to Enter the setting for the item, press + or - to make the change. After the change is complete, press Exit and enter the password. Press Save to Save the change and Exit. Press Esc to Exit without saving the change.

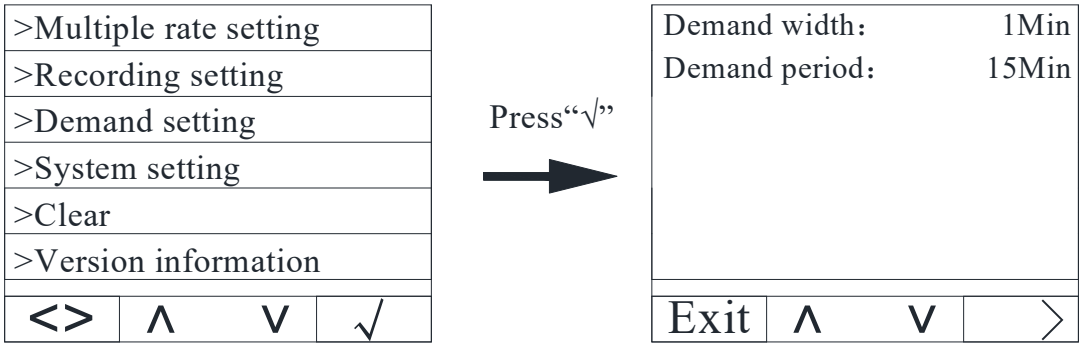

Figure 39

Table 18

Setting item	range
Demand width	1，2，3，5Min
Demand cycle	5-60Min (set according to the required width, must be an integral multiple of the required width)

Demand calculation method：

The APM series meters use the sliding window method to calculate the required amount. In the sliding window calculation cycle, select a calculation cycle and a sliding window. The sliding window must divide the calculation period equally. For example: set three 5 minute sliding windows in the 15-minute calculation cycle. Refresh the current demand at the end of each sliding window. The schematic diagram is as follows:

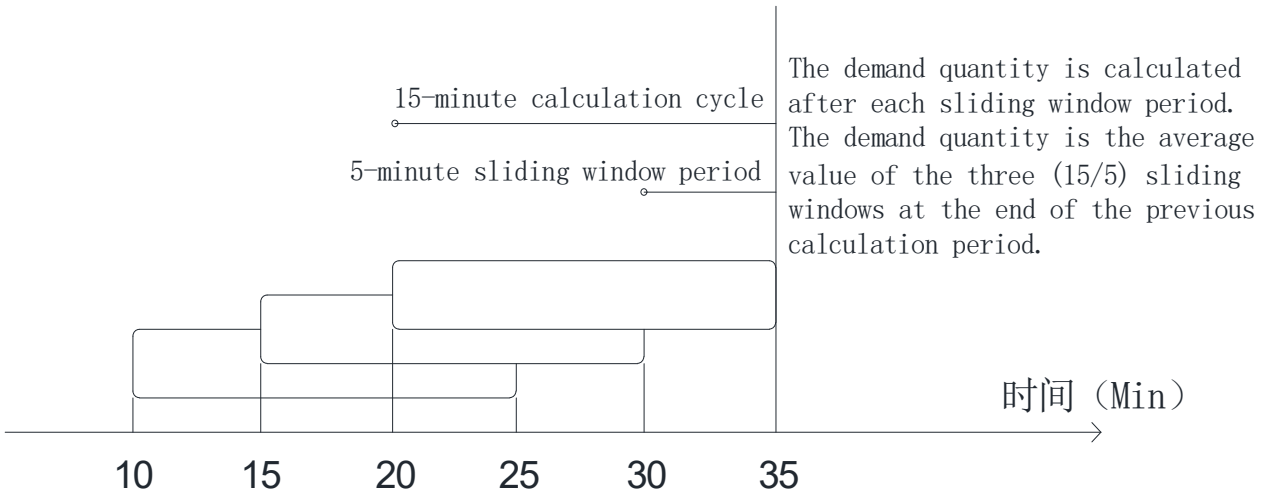

Figure 40

5.11 System settings

On the main interface, press Menu to enter the Menu interface, press ∨ until "Parameter setting" is highlighted, press √ to enter the parameter setting interface. Press ∨ until "Demand setting" is highlighted, and press √ to enter the demand setting interface. Press ∧ or ∨ to switch the item for the quantity setting, press Enter to Enter the setting for the item, press + or - to make the change. After the change is complete, press Exit and enter the password. Press Save to Save the change and Exit. Press Esc to Exit without saving the change

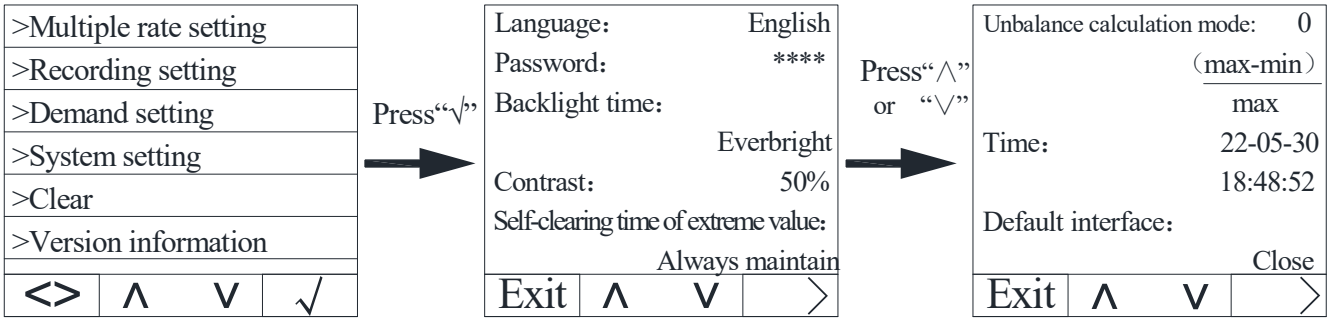

Figure 41

Table 19

Setting item	range	description
language	Chinese, English, the factory default setting is Chinese	Change the instrument display language
password	0000~9999，The factory default is 0001, customers can modify the settings themselves. If you forget your password, you need to contact us.	Change the original password and change it.
Backlight time	Constantly bright, 1~9999, the meter defaults to always bright	1~9999: After delaying the set value, the backlight is off, in seconds.
Contrast	1~99%，The meter default is 50%	Change meter display contrast, default is 50%
Extreme self-clearing time	Always keep, re-statistics every month, re-statistics every day, re-statistics every hour, re-statistic every 30 minutes, re-statistic every 15 minutes, the meter defaults to keep	Extreme statistical time
Unbalanced calculation mode	$0=\frac{\max-\min}{\max}$ $1=\frac{\max\{\lvert A-avg\rvert,\lvert B-avg\rvert,\lvert C-avg\rvert\}}{ave}$ $2=\frac{\max\{\lvert A-ave\rvert,\lvert B-ave\rvert,\lvert C-ave\rvert\}}{rating}$ In the above algorithm Algorithm 0 refers to Q/GDW 1519-2014 Algorithm 1 refers to IEEE STD 1159 1995-RECOMMENDED PRACTICE FOR MONITORING ELECTRIC POWER QUALITY	3 different imbalance algorithms, customers can set according to their needs. In addition, it should be noted that the unbalance calculation is a relative percentage, the calculation should also consider the size of the load rate, for the load rate is small under the condition of the unbalance calculation value is larger, the impact and harm caused by it is small.

	Algorithm 2 our company customized A, B, C are: valid values for each phase A', B', C' are: phase vectors Max is: The maximum value of three phases Min is: the three-phase minimum Avg is: three-phase average Rating is: Rating The meter defaults to 0	
Time	yy-mm-dd hh:mm:ss	Display format is year, month, day, hour, minute, second
Default interface	Off (default is off) Overview, current line voltage, current current, frequency, total power, active power demand, active energy, reactive energy, apparent energy, total forward rate power, total reverse rate power, total current harmonics, voltage Total harmonics, vector graphics, voltage sequence components, current sequence components, DIDO event records, current alarm status, transient records, TF card storage status	After 1 minute without any operation, the meter jumps back to the main interface, after the instrument is powered off.

5.12 Clear settings

On the main interface, press Menu to enter the menu interface, press ∨ until “Parameter Setting” is highlighted, and press √ to enter the parameter setting interface. Press ∨ until “Clear Settings” is highlighted, press √ to enter the clear settings interface. Press ∧ or ∨ to switch to clear the set item, press Enter, enter the password in the pop-up window, press Clr&Exit to wait for the clearing, press Esc to clear the project data, and press Exit to exit.

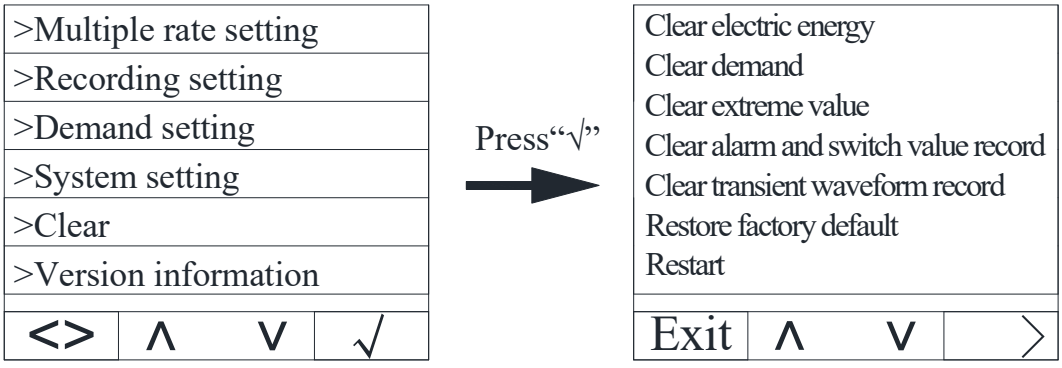

Figure 42

Table 20

project	Description
Clear power	Clear power
Clear demand	Clear power demand, current demand
Clear extreme value	Clear the maximum and minimum values of voltage, current and other electrical parameters
Clear alarm and switch records	Clear alarm record and switch record
Clear transient waveform record	Clear voltage waveform records such as voltage interruption, sag, sag, and inrush current
Restore factory default	Restore factory default
Restart	Restart

5.13 version information

On the main interface, press Menu to enter the menu interface, press ∨ until the parameter setting is highlighted, and press √ to enter the parameter setting interface. Press ∨ until "Version Information" is highlighted, press √ to enter the version information. Contains meter version information, module version information, and meter internal temperature.

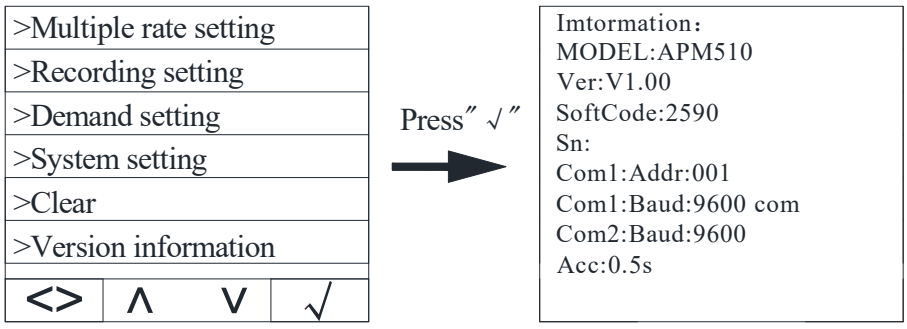

Figure 43

6. Modbus Communication instructions

6.1 Intruduction

APM series network power meter communication adopts MODBUS-RTU communication protocol, MODBUS protocol defines in detail the check code, data sequence, etc., which are necessary contents for specific data exchange.

The first communication supports 0x03 (read hold registers), 0x16 (write multiple registers), 0x01 (read coil status), 0x02 (read input status), 0x05 (write single coil) function code.

If you extend the second communication or Ethernet communication (MODBUS-TCP), only the 0x03 (read hold register) function code is supported.

6.2 Communication Address Table

Table 21

Address	Name	Description	R/W	Word	type	remark
0x1000	Addr1	Address 1	R/W	1	Uint16	1-247
0x1001	Baud1	Baud rate 1	R/W	1	Uint16	1200，2400，4800，9600，19200，38400，57600bps
0x1002	Check1	Check digit 1	R/W	1	Uint16	Low byte 0: No check 1: Odd check 2: Parity High bytes 0:1 stop bit 1:1.5 stop bit 2:2 stop bit
0x1004	Baud2	Baud rate 2	R/W	1	Uint16	1200，2400，4800，9600，19200，38400，57600bps
0x1005	Check2	Check digit 2	R/W	1	Uint16	Low byte 0: No check 1: Odd check 2: Parity High bytes 0:1 stop bit 1:1.5 stop bit 2:2 stop bit

0x1006	645Addr	645 address	R/W	3	Uint16	BCD code high in front
0x1009	SnNum	Serial number	R/W	7	Ascii	14 ASCII codes
0x1010	Line	Wiring method	R/W	1	Uint16	0:3P4L 1:3P3L
0x1011	UbTwoSide	Secondary voltage rating	R/W	1	Uint16	One decimal place V
0x1012	IbTwoSide	Secondary rating of current	R/W	1	Uint16	Two decimal places A
0x1013	InTwoSide	Secondary rating of neutral conductor current	R/W	1	Uint16	Two decimal places A
0x1015	UbOneSide	One decimal place V	R/W	1	Uint32	One decimal place V
0x1017	IbOneSide	The primary rating of the current	R/W	1	Uint32	Two decimal places A
0x1019	InOneSide	One-time rating of neutral conductor curren	R/W	1	Uint32	Two decimal places A
0x101D	Password	password	R/W	1	Uint16	1-9999
0x101E	Pluse	Pulse constant	R/W	1	Uint16	The default is 6400
0x101F	UShield	Voltage shielding	R/W	1	Uint16	0~655.35%
0x1020	IShield	Current shielding	R/W	1	Uint16	0~655.35%
0x1021	InShield	Neutral conductor current shielding	R/W	1	Uint16	0~655.35%
0x1023	DisPage	Pin the display page or display it dynamically	R/W	1	Uint16	0: Dynamics 1, 2, 3
0x1024	Language	language	R/W	1	Uint16	0: Chinese 1: English
0x1025	DemandWidth	Demand width	R/W	1	Uint16	Units min (1-5).
0x1026	DemandPeriod	Demand cycle	R/W	1	Uint16	Units min (1-30).
0x102E	BlackTime	Backlight time	R/W	1	Uint16	0: Solid on 1:1min 2:2min
0x102F	SysTime	Time	R/W	5	Uint16	year Month, Day, Week, hour, minute, second millisecond
0x1034	CopyTime	Automatic meter reading days	R/W	1	Uint16	High byte: Day Low byte: hour
0x1036	DOState	DO status	R/W	1	Uint16	Bit0:DO1 Bit1: DO2... 0: Open 1: Closed

0x1037	DIState	DI status	R	1	Uint16	Bit0:DI1 Bit1: DI2... 0: Open 1: Closed
0x1038	ZoneNum1,ZoneMonth1,ZoneDay1 ZoneNum2,ZoneMonth2,ZoneDay2 ZoneNum3,ZoneMonth3,ZoneDay3 ZoneNum4,ZoneMonth4,ZoneDay4 ZoneNum5,ZoneMonth5,ZoneDay5 ZoneNum6,ZoneMonth6,ZoneDay6 ZoneNum7,ZoneMonth7,ZoneDay7 ZoneNum8,ZoneMonth8,ZoneDay8	The first time zone timeframe table number The first time zone starts the month, the first time zone day The second time zone time period table number The second time zone starts the month, and the second time zone day Third time zone timeframe table number The third time zone starts the month, and the third time zone day Fourth time zone timeframe table number The fourth time zone starts the month, and the fourth time zone day Fifth time zone timeframe table number The fifth time zone starts the month, and the fifth time zone day Sixth time zone timeframe table number The sixth time zone starts the month, and the sixth time zone day Seventh time zone time period table number The seventh time zone starts the month, and the seventh time zone day Eighth time zone timeframe table number The eighth time zone starts the month, and the eighth time zone day	R/W	6	Uint16	Time period table number: Period 1, Period 2, Period 3, Period 4, Start months: 1-12 Start days: 1-31

0x1044	Table1 Rt1~Rt14	The first set of time tables, Each time period occupies three bytes, which are the rate, the beginning, and the beginning of the minute	R/W	21	Uint16	Rate: 0 1 tip, 2 peaks 3 flat, 4 valleys Start: 0-23 Starting score: 1-59
0x1059	Table2 Rt1~Rt14	The second set of time tables, Each time period occupies three bytes, which are the rate, the beginning, and the beginning of the minute	R/W	21	Uint16	Same as the first set of time table
0x106E	Table3 Rt1~Rt14	The third set of time tables, Each time period occupies three bytes, which are the rate, the beginning, and the beginning of the minute	R/W	21	Uint16	Same as the first set of time table
0x1083	Table4 Rt1~Rt14	The fourth set of timetables, Each time period occupies three bytes, which are the rate, the beginning, and the beginning of the minute	R/W	21	Uint16	Same as the first set of time table
AO setting parameters						
0x10C0	AoSet1 AoHValue1 AoLValue1	The fourth set of timetables, Each time period occupies three bytes, which are the rate, the beginning, and the beginning of the minute	R/W	3	Uint16	ignal Selection: 0: A phase voltage 1: B phase voltage 2: C phase voltage 3: A-line voltage 4: B-line voltage 5: C-line voltage 6: A phase current 7: B phase current 8: C phase current 9: A phase has merit 10: Phase B has merit 11: C phase has merit 12: There is always work 13: Phase A reactive 14: Phase B reactive

						15: C phase reactive 16: Total reactive 17: A look at each other 18: B looks at each other 19: C look at each other 20: Always see 21: A phase power factor 22: B-phase power factor 23: C phase power factor 24: Total power factor 25: Frequency Type: 0：4-20mA 1：0-20mA 2：1-5V 3: 0-5V 4:0-10V High point values: -120.0%~+120.0% Low point value: --120.0%~+120.0%
0x10C3	AoSet2	A02 parameter settings	R/W	3	Uint16	Same as A01 parameter setting
DO setting parameters						
0x1100	DO1Set DO1Width DO1AlarmRelevance1 DO1AlarmRelevance2 DO1AlarmRelevance3 DO1AlarmRelevance4 DO1AlarmRelevance5 DO1AlarmRelevance6 DO1AlarmRelevance7 DO1AlarmRelevance8 DO1AlarmRelevance9 DO1AlarmRelevance10 DO1AlarmRelevance11	0: Remote control mode 1: Associated alarm 1 0: Hold 1: Pulse (remote control only). Associative alarms are set in the same order as the alarm segments from low to high Associated alarm 0-15 bits 0: No 1: Yes Association alarm 16-31 bits 0: No 1: Yes Associated alarm 32-47 bits 0: No 1: Yes	R/W	16	Uint16	DOSet: 0: Remote control 1: Alarm 1 2: Alarm 2

	DO1AlarmRelevance12	Associated alarm 48-63 bits 0: No 1: Yes Associated alarm 64-79 bits 0: No 1: Yes Associated alarm 80-95 bits 0: No 1: Yes Associated alarm 96-111 bit 0: No 1: Yes Associated alarm 112-127 bits 0: No 1: Yes Associated alarm 128-143 bits 0: No 1: Yes Associated alarm 144-159 bits 0: No 1: Yes Associated alarm 160-175 bits 0: No 1: Yes Associated alarm 176-191 bits 0: No 1: Yes				
0x1110	DO2Set	DO2 parameter setting	R/W	16	Uint16	Same as DO1 parameter settings
0x1120	DO3Set	DO3 parameter setting	R/W	16	Uint16	Same as DO1 parameter settings
0x1130	DO4Set	DO4 parameter setting	R/W	16	Uint16	Same as DO1 parameter settings
Alarm 1-stage parameter						
0x1200	Alarm_Ia Alarm_Ia_HValue Alarm_Ia_LValue Alarm_Ia_Band Alarm_Ia_Delay Alarm_Ia_RecorvyDelay	A phase current alarm high byte 0: alarm disabled when the value is 0, alarm enables low byte 0 when the value is 0: alarm off 1: Alarm on A phase current high alarm value A phase current low alarm value A phase current alarm does not operate with (hysteresis). Phase A current alarm delay Phase A current alarm recovery delay	R/W	6	Uint16	Alarm high byte: Alarm is prohibited at 0:0 Alarm enabled at 1:0 Alarm low byte: 0: Alarm off 1: Alarm on Alarm value: -120.0%~+120.0% Inactive band: 0.0%~20.0% Delay: 1~9999

						Recovery delay: 1~9999
0x1206	Alarm_Ib	B-phase current alarm	R/W	6	Uint16	Same as phase A current alarm
0x120C	Alarm_Ic	C-phase current alarm	R/W	6	Uint16	Same as phase A current alarm
0x1212	Alarm_Ix	Any phase current alarm (excluding N-line).	R/W	6	Uint16	Same as phase A current alarm
0x1218	Alarm_In	N phase current alarm	R/W	6	Uint16	Same as phase A current alarm
0x121E	Alarm_Ua	A-phase voltage alarm	R/W	6	Uint16	Same as phase A current alarm
0x1224	Alarm_Ub	B-phase voltage alarm	R/W	6	Uint16	Same as phase A current alarm
0x122A	Alarm_Uc	C-phase voltage alarm	R/W	6	Uint16	Same as phase A current alarm
0x1230	Alarm_Ux	Any phase voltage alarm	R/W	6	Uint16	Same as phase A current alarm
0x1236	Alarm_Uab	AB line voltage alarm	R/W	6	Uint16	Same as phase A current alarm
0x123C	Alarm_Ubc	BC line voltage alarm	R/W	6	Uint16	Same as phase A current alarm
0x1242	Alarm_Uca	CA line voltage alarm	R/W	6	Uint16	Same as phase A current alarm
0x1248	Alarm_Uxx	Any line voltage alarm	R/W	6	Uint16	Same as phase A current alarm
0x124E	Alarm_Pa	A phase active power alarm	R/W	6	Uint16	Same as phase A current alarm
0x1254	Alarm_Pb	B-phase active power alarm	R/W	6	Uint16	Same as phase A current alarm
0x125A	Alarm_Pc	C phase active power alarm	R/W	6	Uint16	Same as phase A current alarm
0x1260	Alarm_Ps	Total active power alarm	R/W	6	Uint16	Same as phase A current alarm
0x1266	Alarm_Qa	A phase reactive power alarm	R/W	6	Uint16	Same as phase A current

						alarm
0x126C	Alarm_Qb	B-phase reactive power alarm	R/W	6	Uint16	Same as phase A current alarm
0x1272	Alarm_Qc	C phase reactive power alarm	R/W	6	Uint16	Same as phase A current alarm
0x1278	Alarm_Qs	Total reactive power alarm	R/W	6	Uint16	Same as phase A current alarm
0x127E	Alarm_Sa	A-phase apparent power alarm	R/W	6	Uint16	Same as phase A current alarm
0x1284	Alarm_Sb	B-phase apparent power alarm	R/W	6	Uint16	Same as phase A current alarm
0x128A	Alarm_Sc	C-phase apparent power alarm	R/W	6	Uint16	Same as phase A current alarm
0x1290	Alarm_Ss	Total apparent power high alarm	R/W	6	Uint16	Same as phase A current alarm
0x1296	Alarm_PFa	A-phase power factor alarm	R/W	6	Uint16	Same as phase A current alarm
0x129C	Alarm_PFb	B-phase power factor alarm	R/W	6	Uint16	Same as phase A current alarm
0x12A2	Alarm_PFc	C-phase power factor alarm	R/W	6	Uint16	Same as phase A current alarm
0x12A8	Alarm_PF	Total power factor alarm	R/W	6	Uint16	Same as phase A current alarm
0x12AE	Alarm_F	Frequency alarm	R/W	6	Uint16	Same as phase A current alarm
0x12B4	Alarm_Uunbalance	Voltage imbalance alarm	R/W	6	Uint16	Same as phase A current alarm
0x12BA	Alarm_Iunbalance	Current imbalance alarm	R/W	6	Uint16	Same as phase A current alarm
0x12C0	Alarm_THDIaP	A-phase current total harmonic content alarm	R/W	6	Uint16	Same as phase A current alarm
0x12C6	Alarm_THDIbP	B-phase current total harmonic content alarm	R/W	6	Uint16	Same as phase A current alarm
0x12CC	Alarm_THDIcP	C-phase current total harmonic content alarm	R/W	6	Uint16	Same as phase A current alarm

0x12D2	Alarm_THDUaP	A-phase voltage total harmonic content alarm	R/W	6	Uint16	Same as phase A current alarm
0x12D8	Alarm_THDUbP	B-phase voltage total harmonic content alarm	R/W	6	Uint16	Same as phase A current alarm
0x12DE	Alarm_THDUcP	C-phase voltage total harmonic content alarm	R/W	6	Uint16	Same as phase A current alarm
0x12E4	Alarm_THDIaPO	A-phase current total even harmonic content rate alarm	R/W	6	Uint16	Same as phase A current alarm
0x12EA	Alarm_THDIbPO	B-phase current total even harmonic content rate alarm	R/W	6	Uint16	Same as phase A current alarm
0x12F0	Alarm_THDIcPO	C-phase current total even harmonic content rate alarm	R/W	6	Uint16	Same as phase A current alarm
0x12F6	Alarm_THDUaPO	A-phase voltage total even harmonic content rate alarm	R/W	6	Uint16	Same as phase A current alarm
0x12FC	Alarm_THDUbPO	B-phase voltage total even harmonic content rate alarm	R/W	6	Uint16	Same as phase A current alarm
0x1302	Alarm_THDUcPO	C-phase voltage total even harmonic content rate alarm	R/W	6	Uint16	Same as phase A current alarm
0x1308	Alarm_THDIaPE	A-phase current total odd harmonic content rate alarm	R/W	6	Uint16	Same as phase A current alarm
0x130E	Alarm_THDIbPE	B-phase current total odd harmonic content rate alarm	R/W	6	Uint16	Same as phase A current alarm
0x1314	Alarm_THDIcPE	C-phase current total odd harmonic content rate alarm	R/W	6	Uint16	Same as phase A current alarm
0x131A	Alarm_THDUaPE	A-phase voltage total odd harmonic content rate alarm	R/W	6	Uint16	Same as phase A current alarm
0x1320	Alarm_THDUbPE	B-phase voltage total odd harmonic content rate alarm	R/W	6	Uint16	Same as phase A current alarm
0x1326	Alarm_THDUcPE	C-phase voltage total odd harmonic content rate alarm	R/W	6	Uint16	Same as phase A current alarm
0x132C	Alarm_Iademand	A-phase current demand alarm	R/W	6	Uint16	Same as phase A current alarm
0x1332	Alarm_Ibdemand	B-phase current demand alarm	R/W	6	Uint16	Same as phase A current alarm
0x1338	Alarm_Icdemand	C-phase current demand alarm	R/W	6	Uint16	Same as phase A current

						alarm
0x133E	Alarm_PPdemand	Total positive active demand alarm	R/W	6	Uint16	Same as phase A current alarm
0x1344	Alarm_PNdemand	Total reverse active demand alarm	R/W	6	Uint16	Same as phase A current alarm
0x134A	Alarm_QPdemand	Total forward reactive power demand alarm	R/W	6	Uint16	Same as phase A current alarm
0x1350	Alarm_QNdemand	Total reverse reactive power demand alarm	R/W	6	Uint16	Same as phase A current alarm
0x1356	Alarm_Sdemand	Total apparent power demand alarm	R/W	6	Uint16	Same as phase A current alarm
0x135C	Alarm_DI1	DI1 alarm	R/W	6	Uint16	Alarm high byte: Alarm is prohibited at 0:0 Alarm enabled at 1:0 Alarm low byte: 0: Alarm off 1: Alarm on Alarm value: 0~1 No Action Band: None Delay: 1~9999 Recovery delay: 1~9999
0x1362	Alarm_DI2	DI2 alarm	R/W	6	Uint16	Same as DI1 alarm
0x1368	Alarm_DI3	DI3 alarm	R/W	6	Uint16	Same as DI1 alarm
0x136E	Alarm_DI4	DI4 alarm	R/W	6	Uint16	Same as DI1 alarm
0x1374	Alarm_DI5	DI5 alarm	R/W	6	Uint16	Same as DI1 alarm
0x137A	Alarm_DI6	DI6 alarm	R/W	6	Uint16	Same as DI1 alarm
0x1380	Alarm_DI7	DI7 alarm	R/W	6	Uint16	Same as DI1 alarm
0x1386	Alarm_DI8	DI8 alarm	R/W	6	Uint16	Same as DI1 alarm
0x138C	Alarm_DI9	DI9 alarm	R/W	6	Uint16	Same as DI1 alarm
0x1392	Alarm_DI10	DI10 alarm	R/W	6	Uint16	Same as DI1 alarm
0x1398	Alarm_DI11	DI11 alarm	R/W	6	Uint16	Same as DI1 alarm
0x139E	Alarm_DI12	DI12 alarm	R/W	6	Uint16	Same as DI1 alarm

0x13A4	Alarm_DI13	DI13 alarm	R/W	6	Uint16	Same as DI1 alarm
0x13AA	Alarm_DI14	DI14 alarm	R/W	6	Uint16	Same as DI1 alarm
0x13B0	Alarm_DI15	DI15 alarm	R/W	6	Uint16	Same as DI1 alarm
0x13B6	Alarm_DI16	DI16 alarm	R/W	6	Uint16	Same as DI1 alarm
0x13BC	Loop1	Leakage (temperature) 1	R/W	6	Uint16	Same as phase A current alarm
0x13C2	Loop2	Leakage (temperature) 2	R/W	6	Uint16	Same as phase A current alarm
0x13C8	Loop3	Leakage (temperature) 3	R/W	6	Uint16	Same as phase A current alarm
0x13CE	Loop4	Leakage (temperature) 4	R/W	6	Uint16	Same as phase A current alarm
0x13D4	Loop5	Leakage (temperature) 5	R/W	6	Uint16	Same as phase A current alarm
0x13DA	Loop6	Leakage (temperature) 6	R/W	6	Uint16	Same as phase A current alarm
0x13DE	Loop7	Leakage (temperature) 7	R/W	6	Uint16	Same as phase A current alarm
0x13E4	Loop8	Leakage (temperature) 8	R/W	6	Uint16	Same as phase A current alarm
0x13EA	Loop9	Leakage (temperature) 9	R/W	6	Uint16	Same as phase A current alarm
0x13F0	Loop10	Leakage (temperature) 10	R/W	6	Uint16	同 A 相电流报警 Same as phase A current alarm
0x13F6	Loop11	Leakage (temperature) 11	R/W	6	Uint16	Same as phase A current alarm
0x13FC	Loop12	Leakage (temperature) 12	R/W	6	Uint16	Same as phase A current alarm
0x1402	Loop13	Leakage (temperature) 13	R/W	6	Uint16	Same as phase A current alarm
0x1408	Loop14	Leakage (temperature) 14	R/W	6	Uint16	Same as phase A current alarm
0x140E	Loop15	Leakage (temperature)15	R/W	6	Uint16	Same as phase A current alarm

0x1414	Loop16	Leakage (temperature)16	R/W	6	Uint16	Same as phase A current alarm
Alarm 2-stage parameter (alarm parameter content is the same as alarm 1-stage parameter)						
0x1700	Alarm_Ia Alarm_Ia_HValue Alarm_Ia_LValue Alarm_Ia_Band Alarm_Ia_Delay Alarm_Ia_RecorvyDelay	A-phase current alarm High byte 0:0 when the alarm is still, and 1 when the alarm is enabled Low byte 0: alarm off, 1: alarm on A-phase current high alarm value A-phase current low alarm value A-phase current alarm no action belt A-phase current alarm delay A-phase current alarm recovery delay	R/W	6	Uint16	
0x1706	Alarm_Ib	B-phase current alarm	R/W	6	Uint16	
0x170C	Alarm_Ic	C-phase current alarm	R/W	6	Uint16	
0x1712	Alarm_Ix	Any phase current alarm (excluding N-line).	R/W	6	Uint16	
0x1718	Alarm_In	N phase current alarm	R/W	6	Uint16	
0x171E	Alarm_Ua	A-phase voltage alarm	R/W	6	Uint16	
0x1724	Alarm_Ub	B-phase voltage alarm	R/W	6	Uint16	
0x172A	Alarm_Uc	C-phase voltage alarm	R/W	6	Uint16	
0x1730	Alarm_Ux	Any phase voltage alarm	R/W	6	Uint16	
0x1736	Alarm_Uab	AB line voltage alarm	R/W	6	Uint16	
0x173C	Alarm_Ubc	BC line voltage alarm	R/W	6	Uint16	
0x1742	Alarm_Uca	CA line voltage alarm	R/W	6	Uint16	
0x1748	Alarm_Uxx	Any line voltage alarm	R/W	6	Uint16	
0x174E	Alarm_Pa	A phase active power alarm	R/W	6	Uint16	
0x1754	Alarm_Pb	B-phase active power alarm	R/W	6	Uint16	
0x175A	Alarm_Pc	C-phase active power alarm	R/W	6	Uint16	
0x1760	Alarm_Ps	Total active power alarm	R/W	6	Uint16	
0x1766	Alarm_Qa	A phase reactive power alarm	R/W	6	Uint16	
0x176C	Alarm_Qb	B-phase reactive power alarm	R/W	6	Uint16	

0x1772	Alarm_Qc	C phase reactive power alarm	R/W	6	Uint16	
0x1778	Alarm_Qs	Total reactive power alarm	R/W	6	Uint16	
0x177E	Alarm_Sa	A-phase apparent power alarm	R/W	6	Uint16	
0x1784	Alarm_Sb	B-phase apparent power alarm	R/W	6	Uint16	
0x178A	Alarm_Sc	C-phase apparent power alarm	R/W	6	Uint16	
0x1790	Alarm_Ss	Total apparent power high alarm	R/W	6	Uint16	
0x1796	Alarm_PFa	A-phase power factor alarm	R/W	6	Uint16	
0x179C	Alarm_PFb	B-phase power factor alarm	R/W	6	Uint16	
0x17A2	Alarm_PFc	C-phase power factor alarm	R/W	6	Uint16	
0x17A8	Alarm_PF	Total power factor alarm	R/W	6	Uint16	
0x17AE	Alarm_F	Frequency alarm	R/W	6	Uint16	
0x17B4	Alarm_Uunbalance	Voltage imbalance alarm	R/W	6	Uint16	
0x17BA	Alarm_Iunbalance	Current imbalance alarm	R/W	6	Uint16	
0x17C0	Alarm_THDIaP	A-phase current total harmonic content alarm	R/W	6	Uint16	
0x17C6	Alarm_THDIbP	B-phase current total harmonic content alarm	R/W	6	Uint16	
0x17CC	Alarm_THDIcP	C-phase current total harmonic content alarm	R/W	6	Uint16	
0x17D2	Alarm_THDUaP	A-phase voltage total harmonic content alarm	R/W	6	Uint16	
0x17D8	Alarm_THDUbP	B-phase voltage total harmonic content alarm	R/W	6	Uint16	
0x17DE	Alarm_THDUcP	C-phase voltage total harmonic content alarm	R/W	6	Uint16	
0x17E4	Alarm_THDIaPO	A-phase current total even harmonic content rate alarm	R/W	6	Uint16	
0x17EA	Alarm_THDIbPO	B-phase current total even harmonic content rate alarm	R/W	6	Uint16	
0x17F0	Alarm_THDIcPO	C-phase current total even harmonic content rate alarm	R/W	6	Uint16	
0x17F6	Alarm_THDUaPO	A-phase voltage total even harmonic content rate alarm	R/W	6	Uint16	
0x17FC	Alarm_THDUbPO	B-phase voltage total even	R/W	6	Uint16	

		harmonic content rate alarm				
0x1802	Alarm_THDUcPO	C-phase voltage total even harmonic content rate alarm	R/W	6	Uint16	
0x1808	Alarm_THDIaPE	A-phase current total odd harmonic content rate alarm	R/W	6	Uint16	
0x180E	Alarm_THDIbPE	B-phase current total odd harmonic content rate alarm	R/W	6	Uint16	
0x1814	Alarm_THDIcPE	C-phase current total odd harmonic content rate alarm	R/W	6	Uint16	
0x181A	Alarm_THDUaPE	A-phase voltage total odd harmonic content rate alarm	R/W	6	Uint16	
0x1820	Alarm_THDUbPE	B-phase voltage total odd harmonic content rate alarm	R/W	6	Uint16	
0x1826	Alarm_THDUcPE	C-phase voltage total odd harmonic content rate alarm	R/W	6	Uint16	
0x182C	Alarm_Iademand	A-phase current demand alarm	R/W	6	Uint16	
0x1832	Alarm_Ibdemand	B-phase current demand alarm	R/W	6	Uint16	
0x1838	Alarm_Icdemand	C-phase current demand alarm	R/W	6	Uint16	
0x183E	Alarm_PPdemand	Total positive active demand alarm	R/W	6	Uint16	
0x1844	Alarm_PNdemand	Total reverse active demand alarm	R/W	6	Uint16	
0x184A	Alarm_QPdemand	Total forward reactive power demand alarm	R/W	6	Uint16	
0x1850	Alarm_QNdemand	Total reverse reactive power demand alarm	R/W	6	Uint16	
0x1856	Alarm_Sdemand	Total apparent power demand alarm	R/W	6	Uint16	
0x185C	Alarm_DI1	DI1 alarm	R/W	6	Uint16	
0x1862	Alarm_DI2	DI2 alarm	R/W	6	Uint16	
0x1868	Alarm_DI3	DI3 alarm	R/W	6	Uint16	
0x186E	Alarm_DI4	DI4 alarm	R/W	6	Uint16	
0x1874	Alarm_DI5	DI5 alarm	R/W	6	Uint16	
0x187A	Alarm_DI6	DI6 alarm	R/W	6	Uint16	
0x1880	Alarm_DI7	DI7 alarm	R/W	6	Uint16	
0x1886	Alarm_DI8	DI8 alarm	R/W	6	Uint16	

0x188C	Alarm_DI9	DI9 alarm	R/W	6	Uint16	
0x1892	Alarm_DI10	DI10 alarm	R/W	6	Uint16	
0x1898	Alarm_DI11	DI11 alarm	R/W	6	Uint16	
0x189E	Alarm_DI12	DI12 alarm	R/W	6	Uint16	
0x18A4	Alarm_DI13	DI13 alarm	R/W	6	Uint16	
0x18AA	Alarm_DI14	DI14 alarm	R/W	6	Uint16	
0x18B0	Alarm_DI15	DI15 alarm	R/W	6	Uint16	
0x18B6	Alarm_DI16	DI16 alarm	R/W	6	Uint16	
0x18BC	Loop1	temperature 1	R/W	6	Uint16	
0x18C2	Loop2	temperature 2	R/W	6	Uint16	
0x18C8	Loop3	temperature 3	R/W	6	Uint16	
0x18CE	Loop4	temperature 4	R/W	6	Uint16	
0x18D4	Loop5	Leakage	R/W	6	Uint16	

Instrument basic electrical parameter information area (function code 03H, 04H).

Address	Name	Description	R/W	Word	Type	Remark
0x2000	UA	A phase voltage	R	2	float	V
0x2002	UB	B-phase voltage	R	2	float	V
0x2004	UC	C-phase voltage	R	2	float	V
0x2006	UAB	AB line voltage	R	2	float	V
0x2008	UBC	BC line voltage	R	2	float	V
0x200a	UCA	CA line voltage	R	2	float	V
0x200c	IA	A phase current	R	2	float	A
0x200e	IB	B phase current	R	2	float	A
0x2010	IC	C phase current	R	2	float	A
0x2012	IN	N-line current	R	2	float	A
0x2014	PA	A phase active power	R	2	float	kW
0x2016	PB	B phase active power	R	2	float	kW
0x2018	PC	C phase active power	R	2	float	kW
0x201a	PT	Total active power	R	2	float	kW
0x201c	QA	A phase reactive power	R	2	float	Kvar
0x201e	QB	B-phase reactive power	R	2	float	Kvar

0x2020	QC	C-phase reactive power	R	2	float	Kvar
0x2022	QT	Total reactive power	R	2	float	Kvar
0x2024	SA	A-phase apparent power	R	2	float	KVA
0x2026	SB	B-phase apparent power	R	2	float	KVA
0x2028	SC	C-phase apparent power	R	2	float	KVA
0x202a	ST	Total apparent power	R	2	float	KVA
0x202c	PFA	A phase power factor	R	2	float	
0x202e	PFB	B-phase power factor	R	2	float	
0x2030	PFC	C-phase power factor	R	2	float	
0x2032	PF	Total power factor	R	2	float	
0x2034	F	Frequency	R	2	float	Hz
0x2036	UNAvg	Phase voltage average	R	2	float	V
0x2038	ULAvg	Line voltage average	R	2	float	V
0x203a	IAvg	Current average	R	2	float	A
0x203c	Uunbalance	Voltage imbalance	R	2	float	%
0x203e	Iunbalance	Current imbalance	R	2	float	%
0x2040	Uresidual	Zero-sequence voltage	R	2	float	V
0x2042	Iresidual	Zero-sequence current	R	2	float	A
0x2044	APangle	A power angle	R	2	float	°
0x2046	BPangle	B Power angle	R	2	float	°
0x2048	CPangle	C power angle	R	2	float	°
0x204a	AUangle	A voltage angle	R	2	float	°
0x204c	BUangle	B voltage angle	R	2	float	°
0x204e	CUangle	C voltage angle	R	2	float	°
0x2050	AIangle	A current angle	R	2	float	°
0x2052	BIangle	B Current angle	R	2	float	°
0x2054	CIangle	C current angle	R	2	float	°
0x2056	TempIn	Internal temperature	R	2	float	°
0x2058	Loop1	temperature 1	R	2	float	mA(℃）
0x205a	Loop2	temperature 2	R	2	float	mA(℃）
0x205c	Loop3	temperature 3	R	2	float	mA(℃）

0x205e	Loop4	temperature 4	R	2	float	mA(℃）
0x2060	Loop5	Leakage	R	2	float	mA(℃）

Secondary side power (Four-rate version)						
Address	Name	Description	R/W	Word	Type	Remark
0x3000	EP	Secondary value of total active energy	R/W	2	Uint32	Two decimal places kWh
0x3002	EPI	Secondary value of positive active energy	R/W	2	Uint32	Two decimal places kWh
0x3004	EPE	Secondary value of reverse active energy	R/W	2	Uint32	Two decimal places kWh
0x3006	EQ	Secondary value of total reactive energy	R/W	2	Uint32	Two decimal places kVarh
0x3008	EQL	Secondary value of forward reactive energy	R/W	2	Uint32	Two decimal places kVarh
0x300a	EQC	Secondary value of reverse reactive energy	R/W	2	Uint32	Two decimal places kVarh
0x300c	ES	Secondary value of apparent electrical energy	R/W	2	Uint32	Two decimal places kVarh
0x300e	EP-F1	Secondary value of total active energy tip	R/W	2	Uint32	Two decimal places kWh
0x3010	EP-F2	Secondary value of total active energy peak	R/W	2	Uint32	Two decimal places kWh
0x3012	EP-F3	Secondary value of total active energy level	R/W	2	Uint32	Two decimal places kWh
0x3014	EP-F4	Secondary value of total active energy valley	R/W	2	Uint32	Two decimal places kWh
0x3016	EPI-F1	Secondary value of forward active energy tip	R/W	2	Uint32	Two decimal places kWh
0x3018	EPI-F2	Secondary value of forward active energy peak	R/W	2	Uint32	Two decimal places kWh
0x301a	EPI-F3	Secondary value of forward active energy level	R/W	2	Uint32	Two decimal places kWh
0x301c	EPI-F4	Secondary value of forward active energy valley	R/W	2	Uint32	Two decimal places kWh
0x301e	EPE-F1	Secondary value of reverse active energy tip	R/W	2	Uint32	Two decimal places kWh
0x3020	EPE-F2	Secondary value of reverse active energy peak	R/W	2	Uint32	Two decimal places kWh
0x3022	EPE-F3	Secondary value of reverse active energy level	R/W	2	Uint32	Two decimal places kWh
0x3024	EPE-F4	Secondary value of reverse active energy valley	R/W	2	Uint32	Two decimal places kWh
0x3026	EQL-F1	Secondary value of forward reactive energy tip	R/W	2	Uint32	Two decimal places kVarh
0x3028	EQL-F2	Secondary value of forward reactive energy peak	R/W	2	Uint32	Two decimal places kVarh
0x302a	EQL-F3	Secondary value of forward reactive energy level	R/W	2	Uint32	Two decimal places kVarh
0x302c	EQL-F4	Secondary value of forward reactive energy valley	R/W	2	Uint32	Two decimal places kVarh
0x302e	EQC-F1	Secondary value of reverse reactive energy tip	R/W	2	Uint32	Two decimal places kVarh
0x3030	EQC-F2	Secondary value of reverse reactive energy peak	R/W	2	Uint32	Two decimal places kVarh
0x3032	EQC-F3	Secondary value of reverse reactive energy level	R/W	2	Uint32	Two decimal places kVarh

0x3034	EQC-F4	Secondary value of reverse reactive energy valley	R/W	2	Uint32	Two decimal places kVarh
0x3036	EPA	Secondary value of total active energy of phase A	R/W	2	Uint32	Two decimal places kWh
0x3038	EPIA	Phase A forward active energy secondary value	R/W	2	Uint32	Two decimal places kWh
0x303a	EPEA	Phase A reverse active energy secondary value	R/W	2	Uint32	Two decimal places kWh
0x303c	EQA	Phase A reactive energy secondary value	R/W	2	Uint32	Two decimal places kVarh
0x303e	EQLA	Phase A forward reactive energy secondary value	R/W	2	Uint32	Two decimal places kVarh
0x3040	EQCA	A reverses to the secondary value of reactive energy	R/W	2	Uint32	Two decimal places kVarh
0x3042	EPIA-F1	A forward active energy tip secondary value	R/W	2	Uint32	Two decimal places kWh
0x3044	EPIA-F2	A forward active energy peak secondary value	R/W	2	Uint32	Two decimal places kWh
0x3046	EPIA-F3	A forward active energy level secondary value	R/W	2	Uint32	Two decimal places kWh
0x3048	EPIA-F4	A forward active energy valley secondary value	R/W	2	Uint32	Two decimal places kWh
0x304a	EPB	Secondary value of total active energy of phase B	R/W	2	Uint32	Two decimal places kWh
0x304c	EPIB	Phase B forward active energy secondary value	R/W	2	Uint32	Two decimal places kWh
0x304e	EPEB	Phase B reverse active energy secondary value	R/W	2	Uint32	Two decimal places kWh
0x3050	EQB	B-phase reactive energy Secondary value	R/W	2	Uint32	Two decimal places kVarh
0x3052	EQLB	B-Phase forward reactive energy secondary value	R/W	2	Uint32	Two decimal places kVarh
0x3054	EQCB	B-Phase reverse reactive energy secondary value	R/W	2	Uint32	Two decimal places kVarh
0x3056	EPIB-F1	B forward active energy tip secondary value	R/W	2	Uint32	Two decimal places kWh
0x3058	EPIB-F2	B forward active energy peak secondary value	R/W	2	Uint32	Two decimal places kWh
0x305a	EPIB-F3	B forward active energy level secondary value	R/W	2	Uint32	Two decimal places kWh
0x305c	EPIB-F4	B forward active energy valley secondary value	R/W	2	Uint32	Two decimal places kWh
0x305e	EPC	Secondary value of total active energy of phase C	R/W	2	Uint32	Two decimal places kWh
0x3060	EPIC	Phase C forward active energy secondary value	R/W	2	Uint32	Two decimal places kWh
0x3062	EPEC	Phase C reverse active energy secondary value	R/W	2	Uint32	Two decimal places kWh
0x3064	EQC	C-phase reactive energy Secondary value	R/W	2	Uint32	Two decimal places kVarh
0x3066	EQLC	C-Phase forward reactive energy secondary value	R/W	2	Uint32	Two decimal places kVarh
0x3068	EQCC	C-Phase reverse reactive energy secondary value	R/W	2	Uint32	Two decimal places kVarh
0x306a	EPIC-F1	C forward active energy tip secondary value	R/W	2	Uint32	Two decimal places kWh
0x306c	EPIC-F2	C forward active energy peak secondary value	R/W	2	Uint32	Two decimal places kWh
0x306e	EPIC-F3	C forward active energy level secondary value	R/W	2	Uint32	Two decimal places kWh
0x3070	EPIC-F4	C forward active energy valley secondary value	R/W	2	Uint32	Two decimal places kWh

Primary side power (Four-rate version)						
0x3080	EP	Primary value value of total active energy	R/W	2	float	kWh
0x3082	EPI	Primary value of positive active energy	R/W	2	float	kWh
0x3084	EPE	of reverse active energy	R/W	2	float	kWh
0x3086	EQ	Primary value of total reactive energy	R/W	2	float	kVarh
0x3088	EQL	Primary value of forward reactive energy	R/W	2	float	kVarh
0x308a	EQC	Primary value of reverse reactive energy	R/W	2	float	kVarh
0x308c	ES	Primary value of apparent electrical energy	R/W	2	float	kVAh
0x308e	EP-F1	Primary value of total active energy tip	R/W	2	float	kWh
0x3090	EP-F2	Primary value of total active energy peak	R/W	2	float	kWh
0x3092	EP-F3	Primary value of total active energy level	R/W	2	float	kWh
0x3094	EP-F4	Primary value of total active energy valley	R/W	2	float	kWh
0x3096	EPI-F1	Primary value of forward active energy tip	R/W	2	float	kWh
0x3098	EPI-F2	Primary value of forward active energy peak	R/W	2	float	kWh
0x309a	EPI-F3	Primary value of forward active energy level	R/W	2	float	kWh
0x309c	EPI-F4	Primary value of forward active energy valley	R/W	2	float	kWh
0x309e	EPE-F1	Primary value of reverse active energy tip	R/W	2	float	kWh
0x30a0	EPE-F2	Primary value of reverse active energy peak	R/W	2	float	kWh
0x30a2	EPE-F3	Primary value of reverse active energy level	R/W	2	float	kWh
0x30a4	EPE-F4	Primary value of reverse active energy valley	R/W	2	float	kWh
0x30a6	EQL-F1	Primary value of forward reactive energy tip	R/W	2	float	kVarh
0x30a8	EQL-F2	Primary value of forward reactive energy peak	R/W	2	float	kVarh
0x30aa	EQL-F3	Primary value of forward reactive energy level	R/W	2	float	kVarh
0x30ac	EQL-F4	Primary value of forward reactive energy valley	R/W	2	float	kVarh
0x30ae	EQC-F1	Primary value of reverse reactive energy tip	R/W	2	float	kVarh
0x30b0	EQC-F2	Primary value of reverse reactive energy level	R/W	2	float	kVarh
0x30b2	EQC-F3	Primary value of reverse reactive energy level	R/W	2	float	kVarh
0x30b4	EQC-F4	Primary value of reverse reactive energy valley	R/W	2	float	kVarh
0x30b6	EPA	Primary value of total active energy of phase A	R/W	2	float	kWh
0x30b8	EPIA	Phase A forward active energy Primary value	R/W	2	float	kWh
0x30ba	EPEA	Phase A reverse active energy Primary value	R/W	2	float	kWh
0x30bc	EQA	Phase A reactive energy Primary value	R/W	2	float	kVarh

0x30be	EQLA	Phase A forward reactive energy Primary value	R/W	2	float	kVarh
0x30c0	EQCA	A reverses to the Primary value of reactive energy	R/W	2	float	kVarh
0x30c2	EPIA-F1	A forward active energy tip Primary value	R/W	2	float	kWh
0x30c4	EPIA-F2	A forward active energy peak Primary value	R/W	2	float	kWh
0x30c6	EPIA-F3	A forward active energy level Primary value	R/W	2	float	kWh
0x30c8	EPIA-F4	A forward active energy valley Primary value	R/W	2	float	kWh
0x30ca	EPB	Primary value of total active energy of phase B	R/W	2	float	kWh
0x30cc	EPIB	Phase B forward active energy Primary value	R/W	2	float	kWh
0x30ce	EPEB	B-Phase reverse active energy Primary value	R/W	2	float	kWh
0x30d0	EQB	B-phase reactive energy Primary value	R/W	2	float	kVarh
0x30d2	EQLB	B-Phase forward reactive energy Primary value	R/W	2	float	kVarh
0x30d4	EQCB	B-Phase reverse reactive energy Primary value	R/W	2	float	kVarh
0x30d6	EPIB-F1	B forward active energy tip Primary value	R/W	2	float	kWh
0x30d8	EPIB-F2	B forward active energy peak Primary value	R/W	2	float	kWh
0x30da	EPIB-F3	B forward active energy level Primary value	R/W	2	float	kWh
0x30dc	EPIB-F4	B forward active energy valley Primary value	R/W	2	float	kWh
0x30de	EPC	Primary value of total active energy of phase C	R/W	2	float	kWh
0x30e0	EPIC	C-Phase forward active energy Primary value	R/W	2	float	kWh
0x30e2	EPEC	C-Phase reverse active energy	R/W	2	float	kWh
0x30e4	EQC	C-phase reactive energy Primary value	R/W	2	float	kVarh
0x30e6	EQLC	C-Phase forward reactive energy Primary value	R/W	2	float	kVarh
0x30e8	EQCC	C-Phase reverse reactive energy Primary value	R/W	2	float	kVarh
0x30ea	EPIC-F1	C forward active energy tip Primary value	R/W	2	float	kWh
0x30ec	EPIC-F2	C forward active energy peak Primary value	R/W	2	float	kWh
0x30ee	EPIC-F3	C forward active energy level Primary value	R/W	2	float	kWh
0x30f0	EPIC-F4	C forward active energy valley Primary value	R/W	2	float	kWh

Secondary side power (eight-rate version)						
Offset address	Name	Description	R/W	Word length	Type	Remark
0xE200	EP	Secondary value of total active energy	R/W	2	Uint32	Two decimal places

						kWh
0xE202	EPI	Secondary value of positive active energy	R/W	2	Uint32	Two decimal places kWh
0xE204	EPE	Secondary value of reverse active energy	R/W	2	Uint32	Two decimal places kWh
0xE206	EQ	Secondary value of total reactive energy	R/W	2	Uint32	Two decimal places kVarh
0xE208	EQL	Secondary value of forward reactive energy	R/W	2	Uint32	Two decimal places kVarh
0xE20a	EQC	Secondary value of reverse reactive energy	R/W	2	Uint32	Two decimal places kVarh
0xE20c	ES	Secondary value of apparent electrical energy	R/W	2	Uint32	Two decimal places kVarh
0xE20e	EP-F1	Secondary value of total active energy tip	R/W	2	Uint32	Two decimal places kWh
0xE210	EP-F2	Secondary value of total active energy peak	R/W	2	Uint32	Two decimal places kWh
0xE212	EP-F3	Secondary value of total active energy level	R/W	2	Uint32	Two decimal places kWh
0xE214	EP-F4	Secondary value of total active energy valley	R/W	2	Uint32	Two decimal places kWh
0xE216	EP-F5	Secondary value of total active energy deep valley	R/W	2	Uint32	Two decimal places kWh
0xE218	EP-F6	reserve	R/W	2	Uint32	Two decimal places kWh
0xE21a	EP-F7	reserve	R/W	2	Uint32	Two decimal places kWh
0xE21c	EP-F8	reserve	R/W	2	Uint32	Two decimal places kWh
0xE21e	EPI-F1	Secondary value of forward active energy tip	R/W	2	Uint32	Two decimal places kWh
0xE220	EPI-F2	Secondary value of forward active energy peak	R/W	2	Uint32	Two decimal places kWh
0xE222	EPI-F3	Secondary value of forward active energy	R/W	2	Uint32	Two decimal places

		level				kWh
0xE224	EPI-F4	Secondary value of forward active energy valley	R/W	2	Uint32	Two decimal places kWh
0xE226	EPI-F5	Secondary value of forward active energy deep valley	R/W	2	Uint32	Two decimal places kWh
0xE228	EPI-F6	reserve	R/W	2	Uint32	Two decimal places kWh
0xE22a	EPI-F7	reserve	R/W	2	Uint32	Two decimal places kWh
0xE22c	EPI-F8	reserve	R/W	2	Uint32	Two decimal places kWh
0x301e	EPE-F1	Secondary value of reverse active energy tip	R/W	2	Uint32	Two decimal places kWh
0x3020	EPE-F2	Secondary value of reverse active energy peak	R/W	2	Uint32	Two decimal places kWh
0x3022	EPE-F3	Secondary value of reverse active energy level	R/W	2	Uint32	Two decimal places kWh
0x3024	EPE-F4	Secondary value of reverse active energy valley	R/W	2	Uint32	Two decimal places kWh
0xE236	EPE-F5	Secondary value of reverse active energy deep valley	R/W	2	Uint32	Two decimal places kWh
0xE238	EPE-F6	reserve	R/W	2	Uint32	Two decimal places kWh
0xE23a	EPE-F7	reserve	R/W	2	Uint32	Two decimal places kWh
0xE23c	EPE-F8	reserve	R/W	2	Uint32	Two decimal places kWh
0xE23e	EQL-F1	Secondary value of forward reactive energy tip	R/W	2	Uint32	Two decimal places kVarh
0xE240	EQL-F2	Secondary value of forward reactive energy peak	R/W	2	Uint32	Two decimal places kVarh
0xE242	EQL-F3	Secondary value of forward reactive energy level	R/W	2	Uint32	Two decimal places kVarh
0xE244	EQL-F4	Secondary value of forward reactive energy valley	R/W	2	Uint32	Two decimal places kVarh

0xE246	EQL-F5	Secondary value of forward reactive energy deep valley	R/W	2	Uint32	Two decimal places kVarh
0xE248	EQL-F6	reserve	R/W	2	Uint32	Two decimal places kVarh
0xE24a	EQL-F7	reserve	R/W	2	Uint32	Two decimal places kVarh
0xE24c	EQL-F8	reserve	R/W	2	Uint32	Two decimal places kVarh
0xE24e	EQC-F1	Secondary value of reverse reactive energy tip	R/W	2	Uint32	Two decimal places kVarh
0xE250	EQC-F2	Secondary value of reverse reactive energy peak	R/W	2	Uint32	Two decimal places kVarh
0xE252	EQC-F3	Secondary value of reverse reactive energy level	R/W	2	Uint32	Two decimal places kVarh
0xE254	EQC-F4	Secondary value of reverse reactive energy valley	R/W	2	Uint32	Two decimal places kVarh
0xE256	EQC-F5	Secondary value of reverse reactive energy deep valley	R/W	2	Uint32	Two decimal places kVarh
0xE258	EQC-F6	reserve	R/W	2	Uint32	Two decimal places kVarh
0xE25a	EQC-F7	reserve	R/W	2	Uint32	Two decimal places kVarh
0xE25c	EQC-F8	reserve	R/W	2	Uint32	Two decimal places kVarh
0xE25e	EPA	Secondary value of total active energy of phase A	R/W	2	Uint32	Two decimal places kWh
0xE260	EPIA	Phase A forward active energy secondary value	R/W	2	Uint32	Two decimal places kWh
0xE262	EPEA	Phase A reverse active energy secondary value	R/W	2	Uint32	Two decimal places kWh
0xE264	EQA	Phase A reactive energy secondary value	R/W	2	Uint32	Two decimal places kVarh
0xE266	EQLA	Phase A forward reactive energy secondary value	R/W	2	Uint32	Two decimal places kVarh
0xE268	EQCA	A reverses to the secondary value of reactive	R/W	2	Uint32	Two decimal places

		energy				kVarh
0xE26a	EPIA-F1	A forward active energy tip secondary value	R/W	2	Uint32	Two decimal places kWh
0xE26c	EPIA-F2	A forward active energy peak secondary value	R/W	2	Uint32	Two decimal places kWh
0xE26e	EPIA-F3	A forward active energy level secondary value	R/W	2	Uint32	Two decimal places kWh
0xE270	EPIA-F4	A forward active energy valley secondary value	R/W	2	Uint32	Two decimal places kWh
0xE272	EPIA-F5	A forward active energy deep valley secondary value	R/W	2	Uint32	Two decimal places kWh
0xE274	EPIA-F6	reserve	R/W	2	Uint32	Two decimal places kWh
0xE276	EPIA-F7	reserve	R/W	2	Uint32	Two decimal places kWh
0xE278	EPIA-F8	reserve	R/W	2	Uint32	Two decimal places kWh
0xE27a	EPB	Secondary value of total active energy of phase B	R/W	2	Uint32	Two decimal places kWh
0xE27c	EPIB	Phase B forward active energy secondary value	R/W	2	Uint32	Two decimal places kWh
0xE27e	EPEB	Phase B reverse active energy secondary value	R/W	2	Uint32	Two decimal places kWh
0xE280	EQB	B-phase reactive energy Secondary value	R/W	2	Uint32	Two decimal places kVarh
0xE282	EQLB	B-Phase forward reactive energy secondary value	R/W	2	Uint32	Two decimal places kVarh
0xE284	EQCB	B-Phase reverse reactive energy secondary value	R/W	2	Uint32	Two decimal places kVarh
0xE286	EPIB-F1	B forward active energy tip secondary value	R/W	2	Uint32	Two decimal places kWh
0xE288	EPIB-F2	B forward active energy peak secondary value	R/W	2	Uint32	Two decimal places kWh
0xE28a	EPIB-F3	B forward active energy level secondary value	R/W	2	Uint32	Two decimal places kWh

0xE28c	EPIB-F4	B forward active energy valley secondary value	R/W	2	Uint32	Two decimal places kWh
0xE28e	EPIB-F5	B forward active energy deep valley secondary value	R/W	2	Uint32	Two decimal places kWh
0xE290	EPIB-F6	reserve	R/W	2	Uint32	Two decimal places kWh
0xE292	EPIB-F7	reserve	R/W	2	Uint32	Two decimal places kWh
0xE294	EPIB-F8	reserve	R/W	2	Uint32	Two decimal places kWh
0xE296	EPC	Secondary value of total active energy of phase C	R/W	2	Uint32	Two decimal places kWh
0xE298	EPIC	Phase C forward active energy secondary value	R/W	2	Uint32	Two decimal places kWh
0xE29a	EPEC	Phase C reverse active energy secondary value	R/W	2	Uint32	Two decimal places kWh
0xE29c	EQC	C-phase reactive energy Secondary value	R/W	2	Uint32	Two decimal places kVarh
0xE29e	EQLC	C-Phase forward reactive energy secondary value	R/W	2	Uint32	Two decimal places kVarh
0xE2a0	EQCC	C-Phase reverse reactive energy secondary value	R/W	2	Uint32	Two decimal places kVarh
0xE2a2	EPIC-F1	C forward active energy tip secondary value	R/W	2	Uint32	Two decimal places kWh
0xE2a4	EPIC-F2	C forward active energy peak secondary value	R/W	2	Uint32	Two decimal places kWh
0xE2a6	EPIC-F3	C forward active energy level secondary value	R/W	2	Uint32	Two decimal places kWh
0xE2a8	EPIC-F4	C forward active energy valley secondary value	R/W	2	Uint32	Two decimal places kWh
0xE2aa	EPIC-F5	C forward active energy deep valley secondary value	R/W	2	Uint32	Two decimal places kWh
0xE2ac	EPIC-F6	reserve	R/W	2	Uint32	Two decimal places kWh
0xE2ae	EPIC-F7	reserve	R/W	2	Uint32	Two decimal places

						kWh
0xE2b0	EPIC-F8	reserve	R/W	2	Uint32	Two decimal places kWh
0xE2b2	EQ1_1	Quadrant 1 total reactive energy secondary value	R/W	2	Uint32	Two decimal places kWh
0xE2b4	EQ1_2	Quadrant 2 total reactive energy secondary value	R/W	2	Uint32	Two decimal places kWh
0xE2b6	EQ1_3	Quadrant 3 total reactive energy secondary value	R/W	2	Uint32	Two decimal places kWh
0xE2b8	EQ1_4	Quadrant 4 total reactive energy secondary value	R/W	2	Uint32	Two decimal places kWh
0xE2ba	EPCL	Net secondary value of total active energy	R/W	2	Uint32	Two decimal places kWh
0xE2bc	EQCL	Net secondary value of total reactive energy	R/W	2	Uint32	Two decimal places kWh
Primary side power (Four-rate version) Primary side energy: After reading as a floating-point value and dividing by 1000, it represents the actual energy.						
0xE300	EP	Primary value value of total active energy	R/W	2	float	Wh
0xE302	EPI	Primary value of positive active energy	R/W	2	float	Wh
0xE304	EPE	of reverse active energy	R/W	2	float	Wh
0xE306	EQ	Primary value of total reactive energy	R/W	2	float	Varh
0xE308	EQL	Primary value of forward reactive energy	R/W	2	float	Varh
0xE30a	EQC	Primary value of reverse reactive energy	R/W	2	float	Varh
0xE30c	ES	Primary value of apparent electrical energy	R/W	2	float	VAh
0xE30e	EP-F1	Primary value of total active energy tip	R/W	2	float	Wh
0xE310	EP-F2	Primary value of total active energy peak	R/W	2	float	Wh
0xE312	EP-F3	Primary value of total active energy level	R/W	2	float	Wh
0xE314	EP-F4	Primary value of total active energy valley	R/W	2	float	Wh
0xE316	EP-F5	Primary value of total active energy deep valley	R/W	2	float	Wh
0xE318	EP-F6	reserve	R/W	2	float	Wh
0xE31a	EP-F7	reserve	R/W	2	float	Wh

0xE31c	EP-F8	reserve	R/W	2	float	Wh
0xE31e	EPI-F1	Primary value of forward active energy tip	R/W	2	float	Wh
0xE320	EPI-F2	Primary value of forward active energy peak	R/W	2	float	Wh
0xE322	EPI-F3	Primary value of forward active energy level	R/W	2	float	Wh
0xE324	EPI-F4	Primary value of forward active energy valley	R/W	2	float	Wh
0xE326	EPI-F5	Primary value of forward active energy deep valley	R/W	2	float	Wh
0xE328	EPI-F6	reserve	R/W	2	float	Wh
0xE32a	EPI-F7	reserve	R/W	2	float	Wh
0xE32c	EPI-F8	reserve	R/W	2	float	Wh
0xE32e	EPE-F1	Primary value of reverse active energy tip	R/W	2	float	Wh
0xE330	EPE-F2	Primary value of reverse active energy peak	R/W	2	float	Wh
0xE332	EPE-F3	Primary value of reverse active energy level	R/W	2	float	Wh
0xE334	EPE-F4	Primary value of reverse active energy valley	R/W	2	float	Wh
0xE336	EPE-F5	Primary value of reverse active energy deep valley	R/W	2	float	Wh
0xE338	EPE-F6	reserve	R/W	2	float	Wh
0xE33a	EPE-F7	reserve	R/W	2	float	Wh
0xE33c	EPE-F8	reserve	R/W	2	float	Wh
0xE33e	EQL-F1	Primary value of forward reactive energy tip	R/W	2	float	Varh
0xE340	EQL-F2	Primary value of forward reactive energy peak	R/W	2	float	Varh
0xE342	EQL-F3	Primary value of forward reactive energy level	R/W	2	float	Varh
0xE344	EQL-F4	Primary value of forward reactive energy valley	R/W	2	float	Varh
0xE346	EQL-F5	Primary value of forward reactive energy deep valley	R/W	2	float	Wh
0xE348	EQL-F6	reserve	R/W	2	float	Wh
0xE34a	EQL-F7	reserve	R/W	2	float	Wh
0xE34c	EQL-F8	reserve	R/W	2	float	Wh

0xE34e	EQC-F1	Primary value of reverse reactive energy tip	R/W	2	float	Varh
0xE350	EQC-F2	Primary value of reverse reactive energy level	R/W	2	float	Varh
0xE352	EQC-F3	Primary value of reverse reactive energy level	R/W	2	float	Varh
0xE354	EQC-F4	Primary value of reverse reactive energy valley	R/W	2	float	Varh
0xE356	EQC-F5	Primary value of reverse reactive energy valley	R/W	2	float	Wh
0xE358	EQC-F6	reserve	R/W	2	float	Wh
0xE35a	EQC-F7	reserve	R/W	2	float	Wh
0xE35c	EQC-F8	reserve	R/W	2	float	Wh
0xE35e	EPA	Primary value of total active energy of phase A	R/W	2	float	Wh
0xE360	EPIA	Phase A forward active energy Primary value	R/W	2	float	Wh
0xE362	EPEA	Phase A reverse active energy Primary value	R/W	2	float	Wh
0xE364	EQA	Phase A reactive energy Primary value	R/W	2	float	Varh
0xE366	EQLA	Phase A forward reactive energy Primary value	R/W	2	float	Varh
0xE368	EQCA	A reverses to the Primary value of reactive energy	R/W	2	float	Varh
0xE36a	EPIA-F1	A forward active energy tip Primary value	R/W	2	float	Wh
0xE36c	EPIA-F2	A forward active energy peak Primary value	R/W	2	float	Wh
0xE36e	EPIA-F3	A forward active energy level Primary value	R/W	2	float	Wh
0xE370	EPIA-F4	A forward active energy valley Primary value	R/W	2	float	Wh
0xE372	EPIA-F5	A forward active energy deep valley Primary value	R/W	2	float	Wh
0xE374	EPIA-F6	reserve	R/W	2	float	Wh
0xE376	EPIA-F7	reserve	R/W	2	float	Wh
0xE378	EPIA-F8	reserve	R/W	2	float	Wh
0xE37a	EPB	Primary value of total active energy of phase B	R/W	2	float	Wh
0xE37c	EPIB	Phase B forward active energy Primary value	R/W	2	float	Wh

0xE37e	EPEB	B-Phase reverse active energy Primary value	R/W	2	float	Wh
0xE380	EQB	B-phase reactive energy Primary value	R/W	2	float	Varh
0xE382	EQLB	B-Phase forward reactive energy Primary value	R/W	2	float	Varh
0xE384	EQCB	B-Phase reverse reactive energy Primary value	R/W	2	float	Varh
0xE386	EPIB-F1	B forward active energy tip Primary value	R/W	2	float	Wh
0xE388	EPIB-F2	B forward active energy peak Primary value	R/W	2	float	Wh
0xE38a	EPIB-F3	B forward active energy level Primary value	R/W	2	float	Wh
0xE38c	EPIB-F4	B forward active energy valley Primary value	R/W	2	float	Wh
0xE38e	EPIB-F5	B forward active energy deep valley Primary value	R/W	2	float	Wh
0xE390	EPIB-F6	reserve	R/W	2	float	Wh
0xE392	EPIB-F7	reserve	R/W	2	float	Wh
0xE394	EPIB-F8	reserve	R/W	2	float	Wh
0xE396	EPC	Primary value of total active energy of phase C	R/W	2	float	Wh
0xE398	EPIC	C-Phase forward active energy Primary value	R/W	2	float	Wh
0xE39a	EPEC	C-Phase reverse active energy	R/W	2	float	Wh
0xE39c	EQC	C-phase reactive energy Primary value	R/W	2	float	Varh
0xE39e	EQLC	C-Phase forward reactive energy Primary value	R/W	2	float	Varh
0xE3a0	EQCC	C-Phase reverse reactive energy Primary value	R/W	2	float	Varh
0xE3a2	EPIC-F1	C forward active energy tip Primary value	R/W	2	float	Wh
0xE3a4	EPIC-F2	C forward active energy peak Primary value	R/W	2	float	Wh
0xE3a6	EPIC-F3	C forward active energy level Primary value	R/W	2	float	Wh
0xE3a8	EPIC-F4	C forward active energy valley Primary value	R/W	2	float	Wh
0xE3aa	EPIC-F5	C forward active energy deep valley Primary value	R/W	2	float	Wh

0xE3ac	EPIC-F6	reserve	R/W	2	float	Wh
0xE3ae	EPIC-F7	reserve	R/W	2	float	Wh
0xE3b0	EPIC-F8	reserve	R/W	2	float	Wh
0xE3b2	EQ1_1	Quadrant 1 total reactive energy primary value	R/W	2	float	Varh
0xE3b4	EQ1_2	Quadrant 2 total reactive energy primary value	R/W	2	float	Varh
0xE3b6	EQ1_3	Quadrant 3 total reactive energy primary value	R/W	2	float	Varh
0xE3b8	EQ1_4	Quadrant 4 total reactive energy primary value	R/W	2	float	Varh
0xE3ba	EPCL	Net primary value of total active energy	R/W	2	float	Wh
0xE3bc	EQCL	Net primary value of total reactive energy	R/W	2	float	Varh

12 months of electricity in history

0xC000	The total active electric energy in the positive direction in January of history	R	2	float	kWh
0XC002	The peak active energy in the positive direction for January in history	R	2	float	kWh
0XC004	The forward - looking active peak electric energy in January of history	R	2	float	kWh
0XC006	The forward - active flat - rate electric energy in January of history	R	2	float	kWh
0XC008	The forward - active valley electric energy in January of history	R	2	float	kWh
0XC00A	The forward - active deep - valley electric energy in January of history	R	2	float	kWh
0XC00C	The sixth - rate forward - active electric energy in January of history.	R	2	float	kWh
0XC00E	The 7th - rate forward - active electric energy in January of history	R	2	float	kWh
0XC010	The 8th - rate forward - active electricity energy in January of history.	R	2	float	kWh
0XC012	The forward - direction electric energy in February of history	R	18	float	kWh

0XC024	The forward - direction electric energy in March of history	R	18	float	kWh
0XC036	The forward - direction electric energy in April of history	R	18	float	kWh
0XC048	The forward - direction electric energy in May of history	R	18	float	kWh
0XC05A	The forward - direction electric energy in June of history	R	18	float	kWh
0XC06C	The forward - direction electric energy in July of history	R	18	float	kWh
0XC07E	The forward - direction electric energy in August of history	R	18	float	kWh
0XC090	The forward - direction electric energy in September of history	R	18	float	kWh
0XC0A2	The forward - direction electric energy in October of history	R	18	float	kWh
0XC0B4	The forward - direction electric energy in November of history	R	18	float	kWh
0XC0C6	The forward - direction electric energy in December of history	R	18	float	kWh
0xC100	The total reverse active electric energy in January of history	R	2	float	kVarh
0XC102	The reverse active peak electric energy (sharp period) in January of history	R	2	float	kVarh
0XC104	The reverse active peak electric energy in January of history	R	2	float	kVarh
0XC106	The reverse active flat electric energy in January of history	R	2	float	kVarh
0XC108	The reverse active valley electric energy in January of history	R	2	float	kVarh
0XC10A	The reverse active deep-valley electric energy in January of history	R	2	float	kVarh
0XC10C	The reverse active electric energy at the sixth rate in January of history	R	2	float	kVarh
0XC10E	The reverse active electric energy at the seventh rate in January of history	R	2	float	kVarh
0XC110	The reverse active electric energy at the eighth rate in January of history	R	2	float	kVarh
0XC112	The reverse - direction electric energy in February of history	R	18	float	kVarh
0XC124	The reverse - direction electric energy in March of history	R	18	float	kVarh
0XC136	The reverse - direction electric energy in April of history	R	18	float	kVarh
0XC148	The reverse - direction electric energy in May of history	R	18	float	kVarh
0XC15A	The reverse - direction electric energy in June of history	R	18	float	kVarh
0XC16C	The reverse - direction electric energy in July of history	R	18	float	kVarh
0XC17E	The reverse - direction electric energy in August of history	R	18	float	kVarh
0XC190	The reverse - direction electric energy in September of history	R	18	float	kVarh
0XC1A2	The reverse - direction electric energy in October of history	R	18	float	kVarh
0XC1B4	The reverse - direction electric energy in November of history	R	18	float	kVarh
0XC1C6	The reverse - direction electric energy in December of history	R	18	float	kVarh

Instrument power demand information area (function code 03H, 04H).

Address	Name	Description	R/W	Word	Type	Remark
0x4000	IAdemand	A-phase current real-time demand	R	2	float	A
0x4002	IBdemand	B-phase current real-time demand	R	2	float	A
0x4004	ICdemand	C-phase current real-time demand	R	2	float	A
0x4006	Pdemand	Total active power real-time demand	R	2	float	kw
0x4008	QHourdemand	Total reactive power real-time demand	R	2	float	kvar
0x400a	SHourdemand	Total apparent power real-time demand	R	2	float	kva
0x4062	IAMonthdemand	A-phase current demand for this month	R	2	float	A
0x4064	IAMonthdemandTime	A-phase current demand occurrence time in this month	R	2	Uint16	month, day, hour, minute
0x4066	IBMonthdemand	B-phase current demand for this month	R	2	float	A
0x4068	IAMonthdemandTime	B-phase current demand occurrence time in this month	R	2	Uint16	month, day, hour, minute
0x406a	ICMonthdemand	C-phase current demand for this month	R	2	float	A
0x406c	ICMonthdemandTime	B-phase current demand occurrence time in this month	R	2	Uint16	month, day, hour, minute
0x407a	PPMonthdemand	Total forward active power demand in this month	R	2	float	kw
0x407c	PPMonthdemandTime	Total forward active power demand occurrence time in this month	R	2		
0x407e	PNMonthdemand	Total reverse active power demand in this month	R	2	float	kw
0x4080	PNMonthdemandTime	Total reverse active power demand occurrence time in this month	R	2	Uint16	month, day, hour, minute
0x4082	QPMonthdemand	Total forward reactive power demand in this month	R	2	float	kvar
0x4084	QPMonthdemandTime	Total forward reactive power demand occurrence time in this month	R	2	Uint16	month, day, hour, minute
0x4086	QMonthdemand	Total reverse reactive power demand in this month	R	2	float	kvar
0x4088	QMonthdemandTime	Total reverse reactive power demand occurrence time in this month	R	2	Uint16	month, day, hour, minute

Instrument extremum information area (function code 03H, 04H).

The first address of the interval	Historical data
0x93	Maximum value record of the month
0x94	Maximum value of last month
0x97	Minimum value record of the month
0x98	Minimum value of last month

For example：0x9300 indicates the maximum value of phase A voltage in the current month

Address	Description	R/W	Word	Type	remark
Ox00	A phase voltage	R	2	float	V
Ox02	A phase voltage extreme value occurrence time	R	3	Uint16	year, month, day, hour, minute, second
0x05	B-phase voltage	R	2	float	V
0x07	B-phase voltage extremes occurrence time	R	3	Uint16	year, month, day, hour, minute, second
0x0a	C-phase voltage	R	2	float	V
0x0c	C-phase voltage extremes occurrence time	R	3	Uint16	year, month, day, hour, minute, second
0x0f	AB line voltage	R	2	float	V
0x11	Ab line voltage extremes occurrence time	R	3	Uint16	year, month, day, hour, minute, second
0x14	BC line voltage	R	2	float	V
0x16	Bc line voltage extremes occurrence time	R	3	Uint16	year, month, day, hour, minute,
0x19	CA line voltage	R	2	float	V
0x1b	CA line voltage extreme value generation time	R	3	Uint16	year, month, day, hour, minute, second
0x1e	A phase current	R	2	float	A
0x20	A phase current extreme value occurrence time	R	3	Uint16	year, month, day, hour, minute, second
0x23	B phase current	R	2	float	A
0x25	B phase current extreme value occurrence time	R	3	Uint16	year, month, day, hour, minute, second
0x28	C phase current	R	2	float	A
0x2a	C phase current extreme value occurrence time	R	3	Uint16	year, month, day, hour,

					minute, second
0x2d	N phase current	R	2	float	A
0x2f	N phase current extreme value occurrence time	R	3	Uint16	year, month, day, hour, minute, second
0x32	A phase active power	R	2	float	KW
Ox34	A phase active power extremes value occurrence time	R	3	Uint16	year, month, day, hour, minute, second
Ox37	B phase active power	R	2	float	KW
0x39	B phase active power extremes value occurrence time	R	3	Uint16	year, month, day, hour, minute, second
0x3c	C phase active power	R	2	float	KW
0x3e	C phase active power extremes value occurrence time	R	3	Uint16	year, month, day, hour, minute, second
Ox41	Total active power	R	2	float	KW
Ox43	Total active power extremes value occurrence time	R	3	Uint16	year, month, day, hour, minute, second
0x46	A phase reactive power	R	2	float	Kvar
0x48	A phase reactive power extremes value occurrence time	R	3	Uint16	year, month, day, hour, minute, second
0x4b	B phase reactive power	R	2	float	Kvar
0x4d	B phase reactive power extremes value occurrence time	R	3	Uint16	year, month, day, hour, minute, second
Ox50	C phase reactive power	R	2	float	Kvar
Ox52	C phase reactive power extremes value occurrence time	R	3	Uint16	year, month, day, hour, minute, second
0x55	Total reactive power	R	2	float	Kvar
0x57	Total reactive power extremes value occurrence time	R	3	Uint16	year, month, day, hour, minute, second
0x5a	A phase apparent power	R	2	float	KVA
0x5c	A phase apparent power extremes value occurrence time	R	3	Uint16	year, month, day, hour, minute, second
0x5f	B phase apparent power	R	2	float	KVA
0x61	B phase apparent power extremes value occurrence time	R	3	Uint16	year, month, day, hour, minute, second

0x64	C phase apparent power	R	2	float	KVA
0x66	C phase apparent power extremes value occurrence time	R	3	Uint16	year, month, day, hour, minute, second
0x69	Total apparent power	R	2	float	KVA
0x6b	Total apparent power extremes value occurrence time	R	3	Uint16	year, month, day, hour, minute, second
0x6e	A phase power factor	R	2	float	
0x70	A phase power factor extreme value occurrence time	R	3	Uint16	year, month, day, hour, minute, second
0x73	B phase power factor	R	2	float	
0x75	B phase power factor extreme value occurrence time	R	3	Uint16	year, month, day, hour, minute, second
0x78	C phase power factor	R	2	float	
0x7a	C phase power factor extreme value occurrence time	R	3	Uint16	year, month, day, hour, minute, second
0x7d	Total power factor	R	2	float	
0x7f	Total power factor extreme value occurrence time	R	3	Uint16	year, month, day, hour, minute, second
0x82	Phase voltage average	R	2	float	V
Ox84	Phase voltage average extreme value occurrence time	R	3	Uint16	year, month, day, hour, minute, second
Ox87	Line voltage average	R	2	float	V
0x89	Line voltage average extreme value occurrence time	R	3	Uint16	year, month, day, hour, minute, second
0x8c	Current average	R	2	float	A
0x8e	Current average extreme value occurrence time	R	3	Uint16	year, month, day, hour, minute, second
Ox91	A-phase voltage total harmonic content rate	R	2	Uint16	0.1%
Ox93	A-phase voltage total harmonic extremum occurrence time	R	3	Uint16	year, month, day, hour, minute, second
0x96	B-phase voltage total harmonic content rate	R	2	Uint16	0.1%
0x98	B-phase voltage total harmonic extremum occurrence time	R	3	Uint16	year, month, day, hour, minute, second
0x9B	C-phase voltage total harmonic content rate	R	2	Uint16	0.1%

0x9D	C-phase voltage total harmonic extremum occurrence time	R	3	Uint16	year, month, day, hour, minute, second
OxA0	A-phase current total harmonic content rate	R	2	Uint16	0.1%
OxA2	A-phase current total harmonic extremum occurrence time	R	3	Uint16	year, month, day, hour, minute, second
0xA5	B-phase current total harmonic content rate	R	2	Uint16	0.1%
0xA7	B-phase current total harmonic extremum occurrence time	R	3	Uint16	year, month, day, hour, minute, second
0xAA	C-phase current total harmonic content rate	R	2	Uint16	0.1%
0xAC	C-phase current total harmonic extremum occurrence time	R	3	Uint16	year, month, day, hour, minute, second

Instrument harmonic fundamental information area (function code 03H, 04H).

Address	Name	Description	R/W	Word	Type	Remark
0x9B00	THDUaP	THD of Phase A voltage	R	1	Uint16	0.1%
0x9B01	THDUbP	THD of Phase B voltage	R	1	Uint16	0.1%
0x9B02	THDUcP	THD of Phase C voltage	R	1	Uint16	0.1%
0x9B03	THDIaP	THD of Phase A current	R	1	Uint16	0.1%
0x9B04	THDIbP	THD of Phase B current	R	1	Uint16	0.1%
0x9B05	THDIcP	THD of Phase C current	R	1	Uint16	0.1%
0x9B06	THDUaPO	Total odd harmonic distortion (TOHD) of Phase A voltage	R	1	Uint16	0.1%
0x9B07	THDUbPO	Total odd harmonic distortion (TOHD) of Phase B voltage	R	1	Uint16	0.1%
0x9B08	THDUcPO	Total odd harmonic distortion (TOHD) of Phase C voltage	R	1	Uint16	0.1%
0x9B09	THDIaPO	Total odd harmonic distortion (TOHD) of Phase A current	R	1	Uint16	0.1%
0x9B0A	THDIbPO	Total odd harmonic distortion (TOHD) of Phase B current	R	1	Uint16	0.1%
0x9B0B	THDIcPO	Total odd harmonic distortion (TOHD) of Phase C current	R	1	Uint16	0.1%
0x9B0C	THDUaPE	Total even harmonic distortion (TEHD) of Phase A voltage	R	1	Uint16	0.1%
0x9B0D	THDUbPE	Total even harmonic distortion (TEHD) of Phase B voltage	R	1	Uint16	0.1%
0x9B0E	THDUcPE	Total even harmonic distortion (TEHD) of Phase C voltage	R	1	Uint16	0.1%
0x9B0F	THDIaPE	Total even harmonic distortion (TEHD) of Phase A current	R	1	Uint16	0.1%
0x9B10	THDIbPE	Total even harmonic distortion (TEHD) of Phase B current	R	1	Uint16	0.1%
0x9B11	THDIcPE	Total even harmonic distortion (TEHD) of Phase C current	R	1	Uint16	0.1%
0x9B12	THUaP（2-63）	2nd-63rd harmonic of Phase A voltage	R	1	Uint16	0.1%

0x9B50	THUbP（2-63）	2nd-63rd harmonic of Phase B voltage	R	1	Uint16	0.1%
0x9B8E	THUcP（2-63）	2nd-63rd harmonic of Phase C voltage	R	1	Uint16	0.1%
0x9BCC	THIaP（2-63）	2nd-63rd harmonic of Phase A current	R	1	Uint16	0.1%
0x9C0A	THIbP（2-63）	2nd-63rd harmonic of Phase B current	R	1	Uint16	0.1%
0x9C48	THIcP（2-63）	2nd-63rd harmonic of Phase C current	R	1	Uint16	0.1%

Instrument alarm recording information area (function code 03H, 04H).

A total of 128 alarm records can be read.

Address	Name	Description	R/W	Word	Type	Remark
0xA000	type of alarm 1	High byte: Alarm number 1-90, Low byte: 0: Alarm dismissed, 1: high alarm, 2: low alarm	R	1	Uint16	
0xA001	year、month of alarm 1	High Byte: Year Low Byte: Month	R	1	Uint16	
0xA002	day、hour of alarm 1	High Byte: Day Low Byte: Hours	R	1	Uint16	
0xA003	minute、second of alarm 1	High byte: minutes Low byte: seconds	R	1	Uint16	
0xA004	Millisecond of alarm 1	0-999ms in milliseconds	R	1	Uint16	
0xA005	Alarm 1 value	The value when the alarm occurs	R	2	float	
0xA007	Alarm 1 channel	Low byte: 1: Alarm 1 2: Alarm 2	R	1	Uint16	
0xA008	Alarm 2 record	Alarm 2 record	R	8	Uint16	
---	---	---	-	--	-	
0xA3F8	Alarm 128 record	Alarm 128 record	R	8	Uint16	

Alarm number				
1：A phase current	2：B phase current	3：C phase current	4：Arbitrary phase current	5：N phase current
6：A phase voltage	7：B phase voltage	8：C phase voltage	9：Arbitrary phase voltage	10：AB line voltage
11：BC line voltage	12：CA line voltage	13：Arbitrary line voltage	14：A phase active power	15：B phase active power
16：C phase active power	17：Total active power	18：A phase reactive power	19：B phase reactive power	20：C phase reactive power

21：Total reactive power	22：A phase apparent power	23：B phase apparent power	24：C phase apparent power	25：Total apparent power
26：A phase power factor	27：B phase power factor	28：C phase power factor	29：Total power factor	30：Frequency
31：Voltage imbalance	32：Current imbalance	33：THD of Phase A current	34：THD of Phase B current	35：THD of Phase current
36：THD of Phase A voltage	37：THD of Phase B voltage	38：THD of Phase C voltage	39：Total even harmonic distortion (TEHD) of Phase A current	40：Total even harmonic distortion (TEHD) of Phase B current
41：Total even harmonic distortion (TEHD) of Phase C current	42：Total even harmonic distortion (TEHD) of Phase A voltage	43：Total even harmonic distortion (TEHD) of Phase B voltage	44：Total even harmonic distortion (TEHD) of Phase C voltage	45：Total odd harmonic distortion (TOHD) of Phase A current
46：Total odd harmonic distortion (TOHD) of Phase B current	47：Total odd harmonic distortion (TOHD) of Phase C current	48：Total odd harmonic distortion (TOHD) of Phase A voltage	49：Total odd harmonic distortion (TOHD) of Phase B voltage	50：Total odd harmonic distortion (TOHD) of Phase C voltage
51：A phase current demand alarm	52：B phase current demand alarm	53：C phase current demand alarm	54：Total forward active demand alarm	55：Total reverse active demand alam
56：Total forward reactive power demand alarm	57：Total reverse reactive power demand alarm	58：Total apparent power demand alarm	59：DI1 alarm	60：DI2 alarm
61：DI3 alarm	62：DI4 alarm	63：DI5 alarm	64：DI6 alarm	65：DI7 alarm
66：DI8 alarm	67：DI9 alarm	68：DI10 alarm	69：DI11 alarm	70：DI12 alarm
71：DI13 alarm	72：DI14 alarm	73：DI15 alarm	74：DI16 alarm	75：Leakage (temperature) 1
76：Leakage (temperature) 2	77：Leakage (temperature) 3	78：Leakage (temperature) 4	79：Leakage (temperature) 5	80：Leakage (temperature) 6
81：Leakage (temperature) 7	82：Leakage (temperature) 8	83：Leakage (temperature) 9	84：Leakage (temperature) 10	85：Leakage (temperature) 11
86：Leakage (temperature) 12	87：Leakage (temperature) 13	88：Leakage (temperature) 14	89：Leakage (temperature) 15	90：Leakage (temperature) 16

Instrument event recording information area (function code 03H, 04H).

A total of 128 event records can be read.

Address	Name	Description	R/W	Word	Type	Remark
0xA400	Action type	High byte 0: None 1: DO 2: DI Low byte 0: Fracture 1: Closed	R	1	Uint16	
0xA401	Action channels	Channels 1 to 8	R	1	Uint16	
0xA402	Action year and month	High Byte: Year Low Byte: Month	R	1	Uint16	
0xA403	Action day and hours	High Byte: Day Low Byte: Hours	R	1	Uint16	
0xA404	Action minute and second	High byte: minutes Low byte: seconds	R	1	Uint16	
0xA405	Action milliseconds	0-999ms in milliseconds	R	1	Uint32	
0xA406	Event 2 record	Event 2 record	R	6	Uint16	
-	--	----	-	-	-	
0A6F8	Event 128 record	Event 128 record	R	6	Uint16	

Alarm status (function code 03H, 04H).

Address	Name	Description	R/W	Word	Type	Remark
Alarm 1 status						
0xA800	Alarm 1 status	0-15 Alarm 0: No 1: Alarm	R	1	Uint16	
0xA801	Alarm 1 status	16-31 Alarm 0: No 1: Alarm	R	1	Uint16	
0xA802	Alarm 1 status	32-47 Alarm 0: No 1: Alarm	R	1	Uint16	
0xA803	Alarm 1 status	48-63 Alarm 0: No 1: Alarm	R	1	Uint16	
0xA804	Alarm 1 status	64-79 Alarm 0: No 1: Alarm	R	1	Uint16	
0xA805	Alarm 1 status	80-95 Alarm 0: No 1: Alarm	R	1	Uint16	
Alarm 2 status						
0xA820	Alarm 2 status	0-15 Alarm 0: No 1: Alarm	R	1	Uint16	
0xA821	Alarm 2 status	16-31 Alarm 0: No 1: Alarm	R	1	Uint16	
0xA822	Alarm 2 status	32-47 Alarm 0: No 1: Alarm	R	1	Uint16	
0xA823	Alarm 2 status	48-63 Alarm 0: No 1: Alarm	R	1	Uint16	
0xA824	Alarm 2 status	64-79 Alarm 0: No 1: Alarm	R	1	Uint16	
0xA825	Alarm 2 status	80-95 Alarm 0: No 1: Alarm	R	1	Uint16	
0xB015	UA voltage deviation		R	1	Int16	

0xB016	UB voltage deviation		R	1	Int16	
0xB017	UC voltage deviation		R	1	Int16	
0xB018	UAB voltage deviation		R	1	Int16	
0xB019	UBC voltage deviation		R	1	Int16	
0xB01A	UCA voltage deviation		R	1	Int16	
0xB01B	IA current deviation		R	1	Int16	
0xB01C	IB current deviation		R	1	Int16	
0xB01D	IC current deviation		R	1	Int16	
0xB01E	Frequency deviation		R	1	Int16	
0xB020~0xB021	UA short flicker		R	1	Uint16	
0xB022~0xB023	UB short flicker		R	1	Uint16	
0xB024~0xB025	UC short flicker		R	1	Uint16	
0xB026~0xB027	UA long flicker		R	1	Uint16	
0xB028~0xB029	UB long flicker		R	1	Uint16	
0xB02A~0xB02B	UC long flicker		R	1	Uint16	
Last frozen data						
0xC400	Positive active electric energy		R	1	float	
0xC402	Reverse active electric energy		R	1	float	
0xC404	Inductive reactive electric energy		R	1	float	
0xC406	Capacitive reactive electric energy		R	1	float	
0xC408	Phase A current demand		R	1	float	
0xC40A	Phase B current demand		R	1	float	
0xC40C	Phase C current demand		R	1	float	
0xC40E	active power demand		R	1	float	
0xC410	Reactive power demand		R	1	float	
0xC412	Apparent power demand		R	1	float	
0xC414	Phase A current		R	1	float	
0xC416	Phase B current		R	1	float	
0xC418	Phase C current		R	1	float	
0xC41A	UAB		R	1	float	
0xC41C	UBC		R	1	float	
0xC41E	UCA		R	1	float	

0xC420	active power		R	1	float	
0xC422	Reactive power		R	1	float	
0xC424	Apparent power		R	1	float	
0xC426	Power factor		R	1	float	
0xC428	Years		R	1	Uint16	
0xC429	Daytime		R	1	Uint16	
0xC42A	Minutes and seconds		R	1	Uint16	
0xC42B	Reserve		R	1	Uint16	
0XC42C-0XC457	Last 2 frozen data					
0XC458-0XC483	Last 3 frozen data					
0XC484-0XC4AF	Last 4 frozen data					
0XC4B0-0XC4DB	Last 5 frozen data					
0XC4DC-0XC507	Last 6 frozen data					
0XC508-0XC533	Last 7 frozen data					
0XC534-0XC55F	Last 8 frozen data					
0XC560-0XC58B	Last 9 frozen data					
0XC58C-0XC5B7	Last 10 frozen data					
0XC5B8-0XC5E3	Last 11 frozen data					
0XC5E4-0XC60F	Last 12 frozen data					

Serial Number Transfer Point Table:

Address	Name	Description	R/W	Word length	Type	Remark
0xf000~0xf006	Serialnum	Serial number	R	14	Char	
0xf007	softcode	Software number	R	1	Uint16	
0xf008	Softversion	The software version number	R	1	Uint16	
0xf009~0xf010	Meter_type	Meter model	R	16	Char	
0xf011	otime	Register the reset time	R/W	1	Uint16	min

7. Ethernet Communication Guide

7.1 Ethernet Parameter Modification

7.1.1 Modification by Button

Refer to 5.3 Network Settings of System Settings.

7.2 Modbus TCP address

Same as 6.2

8. DL/T-645 Communication Guide

It mainly describes how to use the software to control the series of instruments through the communication port. Mastery of the content requires that you have a knowledge of the DL/T645-2007 protocol and have read through all the other chapters of this book to have a comprehensive understanding of the functions and application concepts of this product. The content of this chapter includes: DL/T645-2007 protocol description, communication application format details, local application details and parameter address table.

8.1 DL/T645-2007 Brief description of the agreement

The instrument uses a communication protocol that conforms to the DL/T645-2007 specification, and the DL/T645-2007 protocol defines in detail the check digits, data, sequences, etc., which are necessary for specific data exchange. The DL/T645-2007 protocol uses a master-slave answering connection (half-duplex) on a single communication line, which means that signals are transmitted in two opposite directions on a separate communication line. First, the signal of the master computer is addressed to a unique terminal device (slave), and then the reply signal emitted by the terminal device is transmitted to the host in the opposite direction.

The DL/T645-2007 protocol only allows communication between the host (PC, PLC, etc.) and the terminal device, and does not allow data exchange between independent terminal devices, so that each terminal device does not occupy the communication line when they are initialized, but is limited to responding to the query signal that arrives at the local machine.

8.2 Transmission method

Transmission mode refers to a series of independent data structures within a data frame and limited rules for transmitting data, and the transmission mode compatible with the DL/T645-2007 protocol– RTU mode is defined below.

Bits per byte

1 start bit

8 data bits, the smallest significant bit is sent first

1 parity bit

1 stop bit

Error checking and validation

8.3 Protocol

When the data frame arrives at the terminal device, it enters the addressed device through a simple "port", the device removes the "envelope" (data header) of the data frame, reads the data, if there is no error, performs the task requested by the data, and then, it adds its own generated data to the obtained "envelope" and returns the data frame to the sender. The response data returned contains the following: the terminal slave address (Address), the executed command (Function), the requested data (Data) generated by the execution of the command, and a check .enough. No error occurs without a successful response, or an error indication frame is returned.

8.3.1 Data frame format

68H	A0	A1	A2	A3	A4	A5	68H	C	L	DI0	DI1	N1	…	Nm	CS	16H
Starter	Address fields						Frame start	Control code	The length of the data	Data identity		Data			Check code	Terminator

a) Frame starter 68H

Identifies the beginning of a frame of data with a value of 68H

b) Address fields A0~A5

The address field consists of 6 bytes (8-bit binary code) with 2 bits of BCD code per byte. The address can be up to 12 digits in decimal length. These bits indicate the address of the user-specified end device that receives data from the host connected to it. The address of each end device must be unique, and only the addressed terminal will respond to queries that contain that address. When the terminal sends back a response, the slave address data in the response tells the host which terminal is communicating with it. When the address is 999999999999H, it is a broadcast address. Valid only for special commands, such as broadcast time, broadcast freeze, and so on. Broadcast commands do not require slave answers.

Address domains are transferred with low bytes in front and high bytes in the back.

c)Control code C

The functional domain code tells the addressed terminal what function it performs. The following table lists the function codes used in this series of meters, as well as their meaning and function.

Table 22

code	significance	behavior
11H	Read the data	Read data from APM Series meters
91H	Read data reply	APM Series meters respond to read data
14H	Write data	Write data to APM
94H	Write a data reply	APM series meters respond to write data
D4H or D1H	Error answer	The data received is incorrect

d) Length L of data fields (data identification and data).

The byte length of the data field. L≤200 when reading data, 50 ≤ when writing data, and no data field when L=0.

e) Data field DATA

Data fields include data identification, password, operator code, data, frame sequence number, etc., the structure of which changes with the function of the control code. During transmission, the sender is processed by byte plus 33H, and the receiver is processed by byte minus 33H.

f) Error check CS

The sum of modulo 256 of all bytes from the frame starter to the check digit, i.e. the binary sum of the binaries of each byte, does not count overflow values exceeding 256.

g) Terminator 16H

Identifies the end of a frame of data

8.3.2 transmission

a) Leading bytes

Before sending the frame information, 1 to 4 bytes of FEH can be transmitted to wake up the receiver

b) Order of transmission

All data items are transferred first by the low bit and then the high bit byte. The data items transmitted (except the switching quantity) are all compressed BCD codes plus 33H for the actual data. If the external host reads the forward active energy of the APM series meter, the instrument address is 1:

Host sends: FE 68 01 00 00 00 00 00 00 68 11 04 33 33 34 33 B3 16

APM Series Meter Response (15.82kWh): 68 01 00 00 00 00 00 00 68 91 08 33 33 34 33 B5 48 33 33 9A 16

c) Transmit responses

Each communication begins with the master sending a request command frame to the slave selected by the information frame address field, and the requested slave responds according to the requirements of the control code in the command frame.

Response delay after receiving command frame: ≤500ms

Pause time between bytes: ≤ 6 bytes of send time, beyond which the APM Series meters consider a new data frame.

d) Error control

Byte checksum is parity, frame checksum is vertical information checksum, and the receiver discards the information frame regardless of whether it detects an error in the parity or vertical information checksum and does not respond.

e) Transmission rate

The initial rate is: 9600bps

Can be set to: 1200, 2400, 4800, 9600, 19200bps

8.3.3 Data identification table

The variable name	Send a sample (taking address 1 as an example, the user can set it according to actual needs, and the address high position is filled with "00000000").	Returns the word Number of stanzas	Returns the data format (Secondary test).	Returns the data units
A phase voltage	68 01 00 00 00 00 00 68 11 04 33 34 34 35 B6 16	2	XXX.X	V
B-phase voltage	68 01 00 00 00 00 00 68 11 04 33 35 34 35 B7 16	2	XXX.X	V
C-phase voltage	68 01 00 00 00 00 00 68 11 04 33 36 34 35 B8 16	2	XXX.X	V
Read voltage data module	68 01 00 00 00 00 00 68 11 04 33 32 34 35 B4 16	2*3	XXX.X	V

A phase current	68 01 00 00 00 00 00 68 11 04 33 34 35 35 B7 16	3	XXX.XXX	A
B phase current	68 01 00 00 00 00 00 68 11 04 33 35 35 35 B8 16	3	XXX.XXX	A
C phase current	68 01 00 00 00 00 00 68 11 04 33 36 35 35 B9 16	3	XXX.XXX	A
Read current data module	68 01 00 00 00 00 00 68 11 04 33 32 35 35 B5 16	3*3	XXX.XXX	A
Total active power	68 01 00 00 00 00 00 68 11 04 33 33 36 35 B7 16	3	XX.XXXX	kW
A phase active power	68 01 00 00 00 00 00 68 11 04 33 34 36 35 B8 16	3	XX.XXXX	kW
B phase active power	68 01 00 00 00 00 00 68 11 04 33 35 36 35 B9 16	3	XX.XXXX	kW
C phase active power	68 A0 00 00 00 00 00 68 11 04 33 36 36 35 BA 16	3	XX.XXXX	kW
Active power data module	68 01 00 00 00 00 00 68 11 04 33 32 36 35 B6 16	3*4	XX.XXXX	kW
Total reactive power	68 01 00 00 00 00 00 68 11 04 33 33 37 35 B8 16	3	XX.XXXX	kvar
A phase reactive power	68 01 00 00 00 00 00 68 11 04 33 34 37 35 B9 16	3	XX.XXXX	kvar
B phase reactive power	68 01 00 00 00 00 00 68 11 04 33 35 37 35 BA 16	3	XX.XXXX	kvar
C phase reactive power	68 01 00 00 00 00 00 68 11 04 33 36 37 35 BB 16	3	XX.XXXX	kvar
Reactive power data module	68 01 00 00 00 00 00 68 11 04 33 32 37 35 B7 16	3*4	XX.XXXX	kvar
Total apparent power	68 01 00 00 00 00 00 68 11 04 33 33 38 35 B9 16	3	XX.XXXX	kVA
A phase apparent power	68 01 00 00 00 00 00 68 11 04 33 34 38 35 BA 16	3	XX.XXXX	kVA
B phase apparent power	68 01 00 00 00 00 00 68 11 04 33 35 38 35 BB 16	3	XX.XXXX	kVA
C phase apparent power	68 01 00 00 00 00 00 68 11 04 33 36 38 35 BC 16	3	XX.XXXX	kVA
Apparent power data module	68 01 00 00 00 00 00 68 11 04 33 32 38 35 B8 16	3*4	XX.XXXX	kVA
Total power factor	68 01 00 00 00 00 00 68 11 04 33 33 39 35 BA 16	2	X.XXX	
A phase power factor	68 01 00 00 00 00 00 68 11 04 33 34 39 35 BA 16	2	X.XXX	
B phase power factor	68 01 00 00 00 00 00 68 11 04 33 35 39 35 BA 16	2	X.XXX	
C phase power factor	68 01 00 00 00 00 00 68 11 04 33 36 39 35 BA 16	2	X.XXX	
Power factor data module	68 01 00 00 00 00 00 68 11 04 33 32 39 35 B9 16	2*4	X.XXX	
Total active energy	68 01 00 00 00 00 00 68 11 04 33 33 33 33 B2 16	4	XXXXXX.XX	kWh
Positive active energy	68 01 00 00 00 00 00 68 11 04 33 33 34 33 B3 16	4	XXXXXX.XX	kWh
Reverse active energy	68 01 00 00 00 00 00 68 11 04 33 33 35 33 B4 16	4	XXXXXX.XX	kWh
Inductive reactive energy	68 01 00 00 00 00 00 68 11 04 33 33 36 33 B5 16	4	XXXXXX.XX	kvarh
Capacitive reactive energy	68 01 00 00 00 00 00 68 11 04 33 33 37 33 B6 16	4	XXXXXX.XX	kvarh
Four-quadrant energy data module	68 01 00 00 00 00 00 68 11 04 33 33 32 33 B1 16	4*5	XXXXXX.XX	kWh/ kvarh
Forward active multi-rate total energy	68 01 00 00 00 00 00 68 11 04 33 33 34 33 B3 16	4	XXXXXX.XX	kWh
Forward active multi-rate tip energy	68 01 00 00 00 00 00 68 11 04 33 34 34 33 B4 16	4	XXXXXX.XX	kWh
Forward active multi-rate peak energy	68 01 00 00 00 00 00 68 11 04 33 35 34 33 B5 16	4	XXXXXX.XX	kWh

Forward active multi-rate level energy	68 01 00 00 00 00 00 68 11 04 33 36 34 33 B6 16	4	XXXXXX.XX	kWh
Forward active multi-rate valley energy	68 01 00 00 00 00 00 68 11 04 33 37 34 33 B7 16	4	XXXXXX.XX	kWh
Current Forward Active Energy Data module	68 01 00 00 00 00 00 68 11 04 33 32 34 33 B2 16	4*5	XXXXXX.XX	kWh
The total electric energy of the forward active multi-rate in the last month	68 01 00 00 00 00 00 68 11 04 34 33 34 33 B4 16	4	XXXXXX.XX	kWh
Forward active multi-rate tip energy in the last month	68 01 00 00 00 00 00 68 11 04 34 34 34 33 B5 16	4	XXXXXX.XX	kWh
Forward active multi-rate peak energy in the last month	68 01 00 00 00 00 00 68 11 04 34 35 34 33 B6 16	4	XXXXXX.XX	kWh
Forward active multi-rate level energy in the last month	68 01 00 00 00 00 00 68 11 04 34 36 34 33 B7 16	4	XXXXXX.XX	kWh
Forward active multi-rate valley energy in the last month	68 01 00 00 00 00 00 68 11 04 34 37 34 33 B8 16	4	XXXXXX.XX	kWh
Forward active energy data block for the last month	68 01 00 00 00 00 00 68 11 04 34 32 34 33 B3 16	4*5	XXXXXX.XX	kWh
The total electric energy of the forward active multi-rate in the last 2 month	68 01 00 00 00 00 00 68 11 04 35 33 34 33 B5 16	4	XXXXXX.XX	kWh
Forward active multi-rate tip energy in the last 2 month	68 01 00 00 00 00 00 68 11 04 35 34 34 33 B6 16	4	XXXXXX.XX	kWh
Forward active multi-rate peak energy in the last 2 month	68 01 00 00 00 00 00 68 11 04 35 35 34 33 B7 16	4	XXXXXX.XX	kWh
Forward active multi-rate level energy in the last 2 month	68 01 00 00 00 00 00 68 11 04 35 36 34 33 B8 16	4	XXXXXX.XX	kWh
Forward active multi-rate valley energy in the last 2	68 01 00 00 00 00 00 68 11 04 35 37 34 33 B9 16	4	XXXXXX.XX	kWh

month				
Forward active energy data block for the last 2 month	68 01 00 00 00 00 00 68 11 04 35 32 34 33 B4 16	4*5	XXXXXX.XX	kWh
The total electric energy of the forward active multi-rate in the last 3 month	68 01 00 00 00 00 00 68 11 04 36 33 34 33 B6 16	4	XXXXXX.XX	kWh
Forward active multi-rate tip energy in the last 3 month	68 01 00 00 00 00 00 68 11 04 36 34 34 33 B7 16	4	XXXXXX.XX	kWh
Forward active multi-rate peak energy in the last 3 month	68 01 00 00 00 00 00 68 11 04 36 35 34 33 B8 16	4	XXXXXX.XX	kWh
Forward active multi-rate level energy in the last 3 month	68 01 00 00 00 00 00 68 11 04 36 36 34 33 B9 16	4	XXXXXX.XX	kWh
Forward active multi-rate valley energy in the last 3 month	68 01 00 00 00 00 00 68 11 04 36 37 34 33 BA 16	4	XXXXXX.XX	kWh
Forward active energy data block for the last 3 month	68 01 00 00 00 00 00 68 11 04 36 32 34 33 B5 16	4*5	XXXXXX.XX	kWh
The total electric energy of the forward active multi-rate in the last 4 month	68 01 00 00 00 00 00 68 11 04 37 33 34 33 B7 16	4	XXXXXX.XX	kWh
Forward active multi-rate tip energy in the last 4 month	68 01 00 00 00 00 00 68 11 04 37 34 34 33 B8 16	4	XXXXXX.XX	kWh
Forward active multi-rate peak energy in the last 4 month	68 01 00 00 00 00 00 68 11 04 37 35 34 33 B9 16	4	XXXXXX.XX	kWh
Forward active multi-rate level energy in the last 4 month	68 01 00 00 00 00 00 68 11 04 37 36 34 33 BA 16	4	XXXXXX.XX	kWh
Forward active multi-rate valley energy in the last 4 month	68 01 00 00 00 00 00 68 11 04 37 37 34 33 BB 16	4	XXXXXX.XX	kWh
Forward active energy	68 01 00 00 00 00 00 68 11 04 37 32 34 33 B6 16	4*5	XXXXXX.XX	kWh

data block for the last 4 month				
The total electric energy of the forward active multi-rate in the last 5 month	68 01 00 00 00 00 00 68 11 04 38 33 34 33 B8 16	4	XXXXXX.XX	kWh
Forward active multi-rate tip energy in the last 5 month	68 01 00 00 00 00 00 68 11 04 38 34 34 33 B9 16	4	XXXXXX.XX	kWh
Forward active multi-rate peak energy in the last 5 month	68 01 00 00 00 00 00 68 11 04 38 35 34 33 BA 16	4	XXXXXX.XX	kWh
Forward active multi-rate level energy in the last 5 month	68 01 00 00 00 00 00 68 11 04 38 36 34 33 BB 16	4	XXXXXX.XX	kWh
Forward active multi-rate valley energy in the last 5 month	68 01 00 00 00 00 00 68 11 04 38 37 34 33 BC 16	4	XXXXXX.XX	kWh
Forward active energy data block for the last 5 month	68 01 00 00 00 00 00 68 11 04 38 32 34 33 B7 16	4*5	XXXXXX.XX	kWh
The total electric energy of the forward active multi-rate in the last 6 month	68 01 00 00 00 00 00 68 11 04 39 33 34 33 B9 16	4	XXXXXX.XX	kWh
Forward active multi-rate tip energy in the last 6 month	68 01 00 00 00 00 00 68 11 04 39 34 34 33 BA 16	4	XXXXXX.XX	kWh
Forward active multi-rate peak energy in the last 6 month	68 01 00 00 00 00 00 68 11 04 39 35 34 33 BB 16	4	XXXXXX.XX	kWh
Forward active multi-rate level energy in the last 6 month	68 01 00 00 00 00 00 68 11 04 39 36 34 33 BC 16	4	XXXXXX.XX	kWh
Forward active multi-rate valley energy in the last 6 month	68 01 00 00 00 00 00 68 11 04 39 37 34 33 BD 16	4	XXXXXX.XX	kWh
Forward active energy data block for the last 6 month	68 01 00 00 00 00 00 68 11 04 39 32 34 33 B8 16	4*5	XXXXXX.XX	kWh

The total electric energy of the forward active multi-rate in the last 7 month	68 01 00 00 00 00 00 68 11 04 3A 33 34 33 BA 16	4	XXXXXX.XX	kWh
Forward active multi-rate tip energy in the last 7 month	68 01 00 00 00 00 00 68 11 04 3A 34 34 33 BB 16	4	XXXXXX.XX	kWh
Forward active multi-rate peak energy in the last 7 month	68 01 00 00 00 00 00 68 11 04 3A 35 34 33 BC 16	4	XXXXXX.XX	kWh
Forward active multi-rate level energy in the last 7 month	68 01 00 00 00 00 00 68 11 04 3A 36 34 33 BD 16	4	XXXXXX.XX	kWh
Forward active multi-rate valley energy in the last 7 month	68 01 00 00 00 00 00 68 11 04 3A 37 34 33 BE 16	4	XXXXXX.XX	kWh
Forward active energy data block for the last 7 month	68 01 00 00 00 00 00 68 11 04 3A 32 34 33 B9 16	4*5	XXXXXX.XX	kWh
The total electric energy of the forward active multi-rate in the last 8 month	68 01 00 00 00 00 00 68 11 04 3B 33 34 33 BB 16	4	XXXXXX.XX	kWh
Forward active multi-rate tip energy in the last 8 month	68 01 00 00 00 00 00 68 11 04 3B 34 34 33 BC 16	4	XXXXXX.XX	kWh
Forward active multi-rate peak energy in the last 8 month	68 01 00 00 00 00 00 68 11 04 3B 35 34 33 BD 16	4	XXXXXX.XX	kWh
Forward active multi-rate level energy in the last 8 month	68 01 00 00 00 00 00 68 11 04 3B 36 34 33 BE 16	4	XXXXXX.XX	kWh
Forward active multi-rate valley energy in the last 8 month	68 01 00 00 00 00 00 68 11 04 3B 37 34 33 BF 16	4	XXXXXX.XX	kWh
Forward active energy data block for the last 8 month	68 01 00 00 00 00 00 68 11 04 3B 32 34 33 BA 16	4*5	XXXXXX.XX	kWh
The total electric energy of the forward active	68 01 00 00 00 00 00 68 11 04 3C 33 34 33 BC 16	4	XXXXXX.XX	kWh

multi-rate in the last 9 month				
Forward active multi-rate tip energy in the last 9 month	68 01 00 00 00 00 00 68 11 04 3C 34 34 33 BD 16	4	XXXXXX.XX	kWh
Forward active multi-rate peak energy in the last 9month	68 01 00 00 00 00 00 68 11 04 3C 35 34 33 BE 16	4	XXXXXX.XX	kWh
Forward active multi-rate level energy in the last 9 month	68 01 00 00 00 00 00 68 11 04 3C 36 34 33 BF 16	4	XXXXXX.XX	kWh
Forward active multi-rate valley energy in the last 9 month	68 01 00 00 00 00 00 68 11 04 3C 37 34 33 C0 16	4	XXXXXX.XX	kWh
Forward active energy data block for the last 9 month	68 01 00 00 00 00 00 68 11 04 3C 32 34 33 BB 16	4*5	XXXXXX.XX	kWh
The total electric energy of the forward active multi-rate in the last 10 month	68 01 00 00 00 00 00 68 11 04 3D 33 34 33 BD 16	4	XXXXXX.XX	kWh
Forward active multi-rate tip energy in the last 10 month	68 01 00 00 00 00 00 68 11 04 3D 34 34 33 BE 16	4	XXXXXX.XX	kWh
Forward active multi-rate peak energy in the last 10 month	68 01 00 00 00 00 00 68 11 04 3D 35 34 33 BF 16	4	XXXXXX.XX	kWh
Forward active multi-rate level energy in the last 10 month	68 01 00 00 00 00 00 68 11 04 3D 36 34 33 C0 16	4	XXXXXX.XX	kWh
Forward active multi-rate valley energy in the last 10 month	68 01 00 00 00 00 00 68 11 04 3D 37 34 33 C1 16	4	XXXXXX.XX	kWh
Forward active energy data block for the last 10 month	68 01 00 00 00 00 00 68 11 04 3D 32 34 33 BC 16	4*5	XXXXXX.XX	kWh
The total electric energy of the forward active multi-rate in the last 11 month	68 01 00 00 00 00 00 68 11 04 3E 33 34 33 BE 16	4	XXXXXX.XX	kWh

Forward active multi-rate tip energy in the last 11 month	68 01 00 00 00 00 00 68 11 04 3E 34 34 33 BF 16	4	XXXXXX.XX	kWh
Forward active multi-rate peak energy in the last 11 month	68 01 00 00 00 00 00 68 11 04 3E 35 34 33 C0 16	4	XXXXXX.XX	kWh
Forward active multi-rate level energy in the last 11month	68 01 00 00 00 00 00 68 11 04 3E 36 34 33 C1 16	4	XXXXXX.XX	kWh
Forward active multi-rate valley energy in the last 11 month	68 01 00 00 00 00 00 68 11 04 3E 37 34 33 C2 16	4	XXXXXX.XX	kWh
Forward active energy data block for the last 11 month	68 01 00 00 00 00 00 68 11 04 3E 37 34 33 BD 16	4*5	XXXXXX.XX	kWh
The total electric energy of the forward active multi-rate in the last 12 month	68 01 00 00 00 00 00 68 11 04 3F 33 34 33 BF 16	4	XXXXXX.XX	kWh
Forward active multi-rate tip energy in the last 12 month	68 01 00 00 00 00 00 68 11 04 3F 34 34 33 C0 16	4	XXXXXX.XX	kWh
Forward active multi-rate peak energy in the last 12 month	68 01 00 00 00 00 00 68 11 04 3F 35 34 33 C1 16	4	XXXXXX.XX	kWh
Forward active multi-rate level energy in the last 12 month	68 01 00 00 00 00 00 68 11 04 3F 36 34 33 C2 16	4	XXXXXX.XX	kWh
Forward active multi-rate valley energy in the last 12 month	68 01 00 00 00 00 00 68 11 04 3F 37 34 33 C3 16	4	XXXXXX.XX	kWh
Forward active energy data block for the last 12 month	68 01 00 00 00 00 00 68 11 04 3F 32 34 33 BE 16	4*5	XXXXXX.XX	kWh
date	68 01 00 00 00 00 00 68 11 04 34 34 33 37 B8 16	4	YYMMDDWW	Year Month day Week
Time	68 01 00 00 00 00 00 68 11 04 35 34 33 37 B9 16	3	HHFFMM	Hours minute seconds

Maximum forward active power demand and occurrence time	68 01 00 00 00 00 00 68 11 04 33 33 34 34 B4 16	8	XX.XXXX YYMMDDhhmm	kW year month day hour minute
Reverse active power maximum demand and occurrence time	68 01 00 00 00 00 00 68 11 04 33 33 35 34 B5 16	8	XX.XXXX YYMMDDhhmm	kW year month day hour minute
Inductive reactive power maximum demand and occurrence time	68 01 00 00 00 00 00 68 11 04 33 33 36 34 B6 16	8	XX.XXXX YYMMDDhhmm	kW year month day hour minute
Maximum capacitive reactive power demand and occurrence time	68 01 00 00 00 00 00 68 11 04 33 33 37 34 B7 16	8	XX.XXXX YYMMDDhhmm	kW year month day hour minute
Maximum apparent power demand and occurrence time	68 01 00 00 00 00 00 68 11 04 33 33 3C 34 BC 16	8	XX.XXXX YYMMDDhhmm	kW year month day hour minute
Reverse apparent power maximum demand and occurrence time	68 01 00 00 00 00 00 68 11 04 33 33 3D 34 BD 16	8	XX.XXXX YYMMDDhhmm	kW year month day hour minute
The maximum demand and occurrence time of forward active power on the previous settlement day	68 01 00 00 00 00 00 68 11 04 34 33 34 34 B5 16	8	XX.XXXX YYMMDDhhmm	kW year month day hour minute
Reverse active power maximum demand and occurrence time on the previous settlement day	68 01 00 00 00 00 00 68 11 04 34 33 35 34 B6 16	8	XX.XXXX YYMMDDhhmm	kW year month day hour minute
Maximum inductive reactive power demand and occurrence time on the previous settlement day	68 01 00 00 00 00 00 68 11 04 34 33 36 34 B7 16	8	XX.XXXX YYMMDDhhmm	kW year month day hour minute
Maximum capacitive reactive power demand	68 01 00 00 00 00 00 68 11 04 34 33 37 34 B8 16	8	XX.XXXX YYMMDDhhmm	kW year month

and occurrence time on the previous settlement day				day hour minute
The maximum demand and occurrence time of forward apparent power on the previous settlement day	68 01 00 00 00 00 00 68 11 04 34 33 3C 34 BD 16	8	XX.XXXX YYMMDDhhmm	kW year month day hour minute
The maximum demand and occurrence time of reverse apparent power on the previous settlement day	68 01 00 00 00 00 00 68 11 04 34 33 3D 34 BE 16	8	XX.XXXX YYMMDDhhmm	kW year month day hour minute
The maximum demand and occurrence time of forward active power on the previous settlement 2 day	68 01 00 00 00 00 00 68 11 04 35 33 34 34 B6 16	8	XX.XXXX YYMMDDhhmm	kW year month day hour minute
…	68 01 00 00 00 00 00 68 11 04 35 33 … 34 … 16	8	XX.XXXX YYMMDDhhmm	kW year month day hour minute
…	…			
The maximum demand and occurrence time of forward active power on the previous settlement 12 day	68 01 00 00 00 00 00 68 11 04 3F 33 34 34 C0 16	8	XX.XXXX YYMMDDhhmm	kW year month day hour minute
…	68 01 00 00 00 00 00 68 11 04 3F 33 … 34 … 16	8	XX.XXXX YYMMDDhhmm	kW 年月日时分 year month day hour minute
Phase A voltage 1th harmonic content	68 01 00 00 00 00 00 68 11 04 34 34 3D 35 C0 16	2	XX.XX	%
Phase A voltage 2nd harmonic content	68 01 00 00 00 00 00 68 11 04 35 34 3D 35 C1 16	2	XX.XX	%
A phase voltage 3rd	68 01 00 00 00 00 00 68 11 04 36 34 3D 35 C0 16	2	XX.XX	%

harmonic content				
Phase A voltage 4th harmonic content	… 37 … CS 16	2	XX.XX	%
…	…	…	…	…
A phase voltage 21th harmonic content	68 01 00 00 00 00 00 68 11 04 48 34 3D 35 D4 16	2	XX.XX	%
B phase voltage 1th harmonic content	68 01 00 00 00 00 00 68 11 04 34 35 3D 35 C1 16	2	XX.XX	%
B phase voltage 2nd harmonic content	68 01 00 00 00 00 00 68 11 04 35 35 3D 35 C2 16	2	XX.XX	%
B phase voltage 3rd harmonic content	68 01 00 00 00 00 00 68 11 04 36 35 3D 35 C2 16	2	XX.XX	%
B-phase voltage 4th harmonic content	… 37 … CS 16	2	XX.XX	%
…	…			
B-phase voltage 21st harmonic content	68 01 00 00 00 00 00 68 11 04 48 35 3D 35 D5 16	2	XX.XX	%
C phase voltage 1th harmonic content	68 01 00 00 00 00 00 68 11 04 34 36 3D 35 C2 16	2	XX.XX	%
C phase voltage 2nd harmonic content	68 01 00 00 00 00 00 68 11 04 35 36 3D 35 C3 16	2	XX.XX	%
C-phase voltage 3rd harmonic content	68 01 00 00 00 00 00 68 11 04 36 36 3D 35 C4 16	2	XX.XX	%
C-phase voltage 4th harmonic content	… 37 … CS 16	2	XX.XX	%
…	…			
C phase voltage 21th harmonic content	68 01 00 00 00 00 00 68 11 04 48 36 3D 35 D6 16	2	XX.XX	%
A phase current 1th harmonic content	68 01 00 00 00 00 00 68 11 04 34 34 3E 35 C1 16	2	XX.XX	%
A phase current 2nd harmonic content	68 01 00 00 00 00 00 68 11 04 35 34 3E 35 C2 16	2	XX.XX	%
A phase current 3rd harmonic content	68 01 00 00 00 00 00 68 11 04 36 34 3E 35 C3 16	2	XX.XX	%
A phase current 4th harmonic content	… 37 … CS 16	2	XX.XX	%
…	…			
A phase current 21th harmonic content	68 01 00 00 00 00 00 68 11 04 48 34 3E 35 D5 16	2	XX.XX	%
B phase current 1th	68 01 00 00 00 00 00 68 11 04 34 35 3E 35 C2 16	2	XX.XX	%

harmonic content				
B phase current 2nd harmonic content	68 01 00 00 00 00 00 68 11 04 35 35 3E 35 C3 16	2	XX.XX	%
Phase B current 3rd harmonic content	68 01 00 00 00 00 00 68 11 04 36 35 3E 35 C4 16	2	XX.XX	%
B phase current 4th harmonic content	… 37 … CS 16	2	XX.XX	%
…	…			
B phase current 21th harmonic content	68 01 00 00 00 00 00 68 11 04 48 35 3E 35 D6 16	2	XX.XX	%
C phase current 1th harmonic content	68 01 00 00 00 00 00 68 11 04 34 36 3E 35 C3 16	2	XX.XX	%
C phase current 2nd harmonic content	68 01 00 00 00 00 00 68 11 04 35 36 3E 35 C4 16	2	XX.XX	%
C phase current 3rd harmonic content	68 01 00 00 00 00 00 68 11 04 36 36 3E 35 C5 16	2	XX.XX	%
C phase current 4th harmonic content	… 37 … CS 16	2	XX.XX	%
…	…			
C phase current 21th harmonic content	68 01 00 00 00 00 00 68 11 04 48 36 3E 35 D7 16	2	XX.XX	%
A-phase voltage waveform distortion	68 01 00 00 00 00 00 68 11 04 33 34 3B 35 BD 16	2	XX.XX	%
B-phase voltage waveform distortion	68 01 00 00 00 00 00 68 11 04 33 35 3B 35 BE 16	2	XX.XX	%
C-phase voltage waveform distortion	68 01 00 00 00 00 00 68 11 04 33 36 3B 35 BF 16	2	XX.XX	%
A-phase current waveform distortion	68 01 00 00 00 00 00 68 11 04 33 34 3C 35 BE 16	2	XX.XX	%
B-phase current waveform distortion	68 01 00 00 00 00 00 68 11 04 33 35 3C 35 BF 16	2	XX.XX	%
C-phase current waveform distortion	68 01 00 00 00 00 00 68 11 04 33 36 3C 35 C0 16	2	XX.XX	%

9. Analysis of common fault

Fault content	Analysis
No display on power	Check whether the power supply voltage is in the working voltage range. Continue to malfunction, after disconnecting the power supply (refer to 3.3 assembly for details), re-insert the main body and the module, restart the instrument after 1 minute, if the fault is not eliminated, you need to contact our company for repair;
Incorrect reading of voltage and current	Check the rated voltage and current of the primary side and secondary side is correct. Check whether the wiring mode setting is consistent with the actual wiring. Check voltage transformer, current transformer is in good condition.
Incorrect power or power factor	Check if the wiring mode setting is consistent with the actual situation; Check if the voltage and current phase sequence is correct;
Communication is abnormal	Check whether the address, baud rate, check digit, etc. in the communication settings are consistent with the host computer; Check if the RS485 converter is normal; Parallel connection of 120 ohms or more at the end of the communication;

10. Package

The package contains the following items: instrument (including plug-in terminal block), mounting bracket, certificate (anti-counterfeit label), installation and operating instructions.

When opening the product packaging, please check carefully for damage. If there is any damage, please inform ACREL company or agent in time, and please keep the damaged outer packaging, the company will replace it in time.

Headquarters: Acrel Co., Ltd.
Trade Company: Acrel E-Business(Shanghai)Co., Ltd.
Address: No.253 Yulv Road, Jiading District, Shanghai, China
TEL.: 0086-21-69156352
Web-site: **www.acrel-electric.com**
E-mail: sales@acrel-electric.com
Postcode: 201801
Manufacturer: Jiangsu Acrel Electrical Manufacturing Co., Ltd.
Address: No.5 Dongmeng Road, Dongmeng industrial Park, Nanzha Street, Jiangyin City, Jiangsu Province, China
TEL./Fax: 0086-510-86179970
Web-site: **www.jsacrel.com**
E-mail: **sales@email.acrel.cn**
Postcode: 214405